Tunable, CW Visible Laser Sources by Frequency Doubling of Broadly Tunable Raman Fiber Lasers

S.Arun*, Vatsal Gehlot, Santosh Aparanji and V R Supradeepa
Centre for Nano Science and Engineering
Indian Institute of Science, Bangalore 560012

ABSTRACT

We have demonstrated a simple technique to make continuous wave (CW), tunable visible lasers. In this experiment, the output from a CW, tunable Raman fiber laser (RFL) is frequency doubled using LBO crystal in a single pass configuration. By tuning the output wavelength of RFL from 1.1-1.3um visible light in green to red wavelengths are generated. The efficiency and output power can be substantially improved by placing the crystal within a resonator cavity and pumping using a polarized RFL with narrower linewidth. Also, by tuning the operating wavelength of Yb laser (1060-1100 nm) broadband visible wavelength tunability can be achieved.
Keywords: Tunable Visible Lasers, Continuous Wave Fiber Lasers, Raman Fiber Lasers, Nonlinear Optics.

1. INTRODUCTION

Visible lasers operating in the wavelength band from 400-700 nm are very useful in a variety of applications like microscopy, spectroscopy biological imaging, instrumentation, material processing etc. [1-4]. However, these visible laser sources are limited in wavelength of operation due to the lack of availability of gain medium that can operate in the desired wavelength band. Therefore, lasers operating in the visible wavelength band are usually generated using nonlinear processes like second harmonic generation (SHG) or sum frequency generation (SFG). Nonlinear crystals like BBO, LBO etc. or QPM materials are used as the medium for nonlinear conversion. Even though both CW and pulsed visible laser sources are developed using this technique, the efficiency of nonlinear conversion increases with increase in intensity of the pump light. As a result, pulsed lasers with high peak powers as the pump source have better conversion efficiency than a CW laser for SHG and SFG processes. In order to generate CW visible lasers, the output from a CW pump laser has to be in the watt class range and usually requires resonant cavities to achieve sufficient efficiency of conversion.

When it comes to CW operation, fiber lasers outperform most other types of solid-state lasers in terms of the maximum average output power and beam quality [5]. Due to the high surface to volume ratio of the gain medium, the heat generated during high power operation can be dissipated very easily in a fiber laser and the strong waveguiding nature of optical fiber produces a single mode output beam. The capability to generate high output power with superior bream quality and spectral purity makes fiber lasers a preferred choice as pump laser sources for nonlinear frequency conversion applications. Generally, fiber lasers can be classified into 3 based on the gain medium used and the wavelength of operation in the 1-2 um band. Fig 1. classifies these laser sources on the wavelength of operation and the maximum power that has been reported from these lasers. It is evident from the figure that Ytterbium (Yb) laser sources that work in 1 um band are more reliable and robust than Erbium lasers in terms of potential for power scaling. And it also important to note that there is no competent fiber laser source that can work in the 1-1.5 um wavelength band. However, this issue has been overcome by using Raman fiber lasers and wavelength tunability in the 1-1.5um band can be easily achieved.

2. RAMAN FIBER LASERS

Raman fiber lasers work on the principle of Stimulated Raman Scattering (SRS) [6,7]. In Raman fiber lasers, a high-power fiber laser source is used to perform a series of cascaded Raman conversion in optical fiber where the pump power from laser in converted to successive longer wavelengths. Using a tunable Yb laser, wavelength tuning can be achieved for the Raman stokes as well thereby accessing all the wavelengths in 1-1.5 um band [8-10].

*aruns@iisc.ac.in

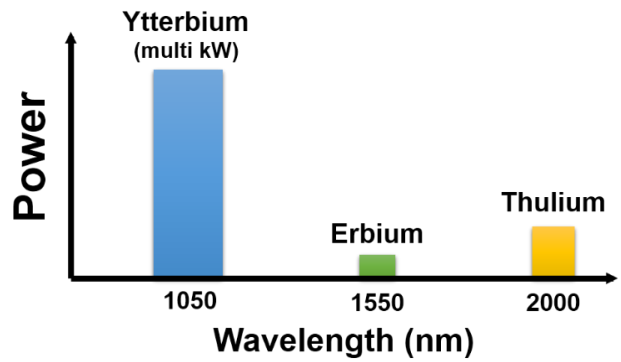

Fig 1: Classification of fiber laser sources based on the wavelength of operation vs. output power.

In our experiment we have used Yb laser as the high power fiber laser source and used 150 m of OFS Raman fiber as the medium for Raman conversion. Raman fiber is a specialty fiber with high normal dispersion (< -80ps/nm/km) in the 1-1.5um band and an effective area of 12 micron sq. at 1117nm and can enhance the Raman conversion process when compared with conventional Silica fibers. While performing this Raman conversion it is important to provide seeding for all the Raman stokes in order to achieve preferential forward Raman scattering [11-12]. This also increases the efficiency of Raman conversions. We had demonstrated wavelength tunable Raman fiber lasers that do not use any wavelength selective components like grating pairs and also provide a wavelength independent feedback for all the Raman conversions [13-14].

The following fig 2. shows the architecture that we used for Raman fiber laser. In this experiment we used a fixed wavelength Yb laser operating at 1064 nm. This will generate stokes wavelengths at 1117, 1175, 1240 nm respectively. In principle by using a tunable Yb laser a corresponding tuning in the stokes wavelength is also possible. Here the Yb laser constitutes of a 6/125 um Nufern fiber as the gain medium, pumped using 976 nm nLIGHT laser diodes (LD). The wavelength of Yb laser is fixed at 1064 nm by the grating pairs HR(2nm) and OC(0.5nm) that form the cavity generating a maximum output power of ~100W.

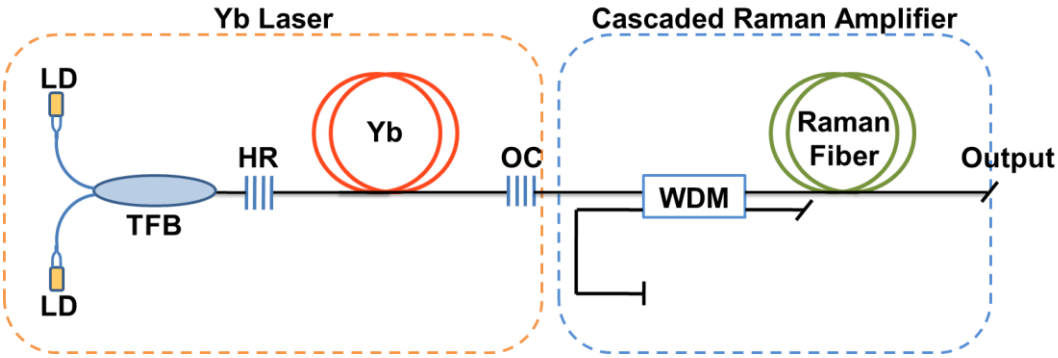

Fig 2: Schematic for the Raman Fiber Laser.

The output from the Yb laser is then coupled into the Raman converter module that consists of a wavelength division multiplexer (WDM) and 150m of Raman fiber. The WDM is a fused fiber coupler device designed to operate at 1117/1480. The purpose of WDM here is to provide feedback for Raman conversion. When the output from the Yb laser enters the Raman fiber, due to Rayleigh scattering occurring within the fiber, a small fraction of light is scattered in the back ward direction as well. When the scattered light propagating in the backward direction enters the WDM, a fraction of light gets coupled into the unused input port of the WDM. We have provided a flat cleave at this input port such that the light exiting this port undergoes a 4% Fresnel reflection. This reflected light will be then directed into the Raman fiber where it provides seeding for the Raman conversions ensuring higher efficiency in the forward direction for Raman scattering [9,10]. We used this Raman fiber laser as the pump source to generate visible light through second harmonic generation (SHG). A schematic representing power transfer from pump wavelength to Stokes wavelengths through Raman conversions is shown in Fig 3.

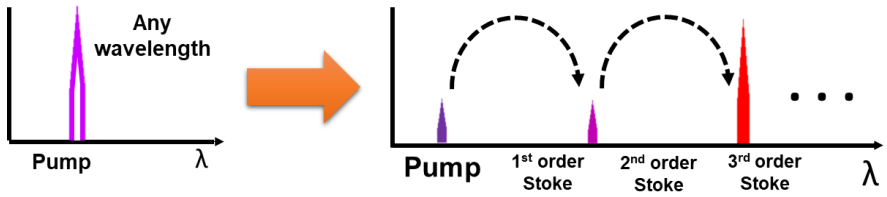

Fig 3: Schematic showing power transfer to longer wavelengths by Raman conversion.

3. EXPERIMENT

In order to perform visible light generation through nonlinear conversion, LBO crystal was used and the Raman fiber laser that can be tuned over 1064,1117,1175 and 1240 was used as the pump. The LBO crystal is having 4x4x25 mm dimension and cut along the x-axis, i.e. ($\theta = 90°$, $\varphi = 0°$) to enable type I non-critical phase matching (NCPM). NCPM operation ensures good beam quality due to the lack of double refraction and better conversion efficiency due to larger spectral acceptance bandwidths. Since the damage threshold of LBO is high, it can be used with high power CW pump laser beams. Even though the effective nonlinear coefficient of LBO crystal is relatively small when compared with other crystal like BBO, the NCPM allows the usage of longer crystal length which can contribute to improving the efficiency of SHG conversion. Most importantly, with temperature tuning of the crystal we can tune the phase matching condition for different wavelengths with NCPM operation. This helps in generating visible light over a wide bandwidth at higher efficiencies. Fig 4 shows the dependence of NCPM phase matching wavelength on temperature in an LBO crystal. We are using an oven that can change the temperature of the crystal from room temperature (25 C) to 150 C.

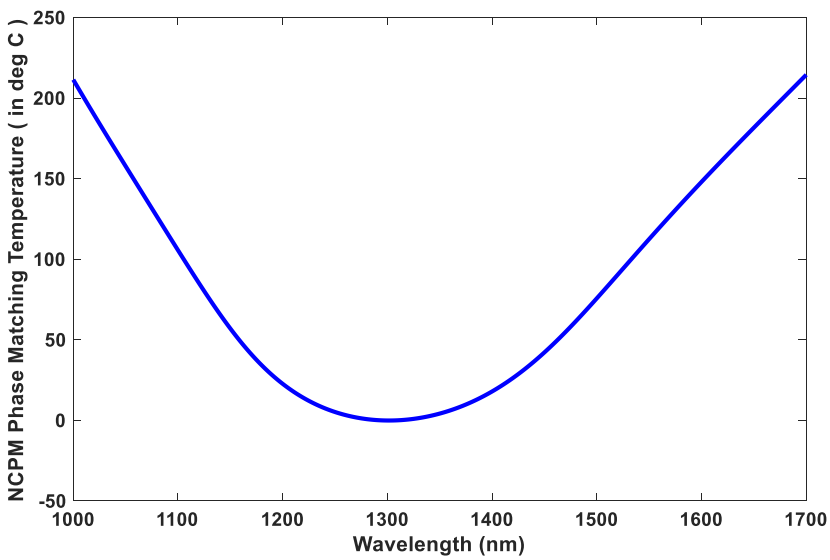

Fig 4 : Dependence of NCPM phase matching wavelength on temperature.

The schematic for experimental setup is shown in fig 5. The frequency conversion is performed in a single pass architecture by which the pump light from the Raman fiber laser passes through the crystal only once. The output from the Raman fiber laser is first coupled into a fiber collimator platform that has an achromatic lens of 19mm focal length. The collimated beam is then focused into the LBO crystal using another achromatic lens with a 60mm focal length. And the nonlinear LBO crystal is mount inside the oven with a temperature controller. In order to make the wavelength measurement of the generated visible light a fraction of the output is coupled into an Ocean Optics USB4000-VIS-NIR spectrometer using a high NA fiber.

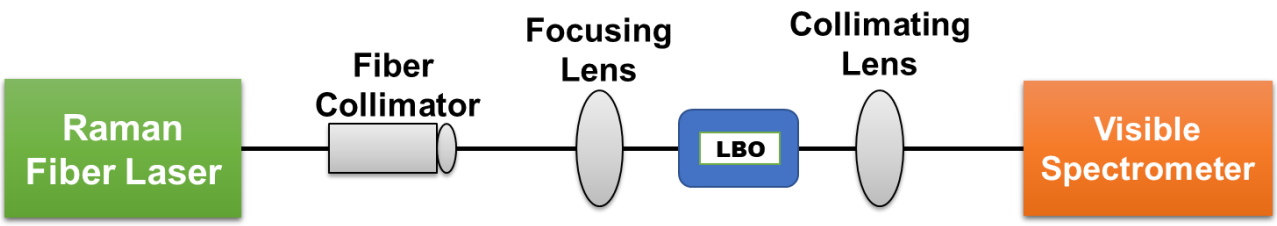

Fig 5: Schematic of the experimental setup for SHG.

Ideally, a polarized laser with narrow linewidth output is preferred for obtaining high conversion efficiency in case of SHG. However, the Raman laser that we used has a depolarized output with slightly broader linewidth of ~1nm. This affects the efficiency of visible light generation. Though, by using the LBO crystal in a resonant cavity configuration for visible light generation and by reducing the linewidth of the laser, the efficiency can be improved better.

4. RESULTS

Here we try to couple ~10 W of CW pump power from the Raman fiber laser (for each Stokes wavelength) into the crystal. The length of the Raman fiber is chosen such that we have maximum depletion of adjacent Stokes lines during the wavelength conversion. The temperature of the crystal is chosen based on fig 4. From the fig 4. it is evident that wavelengths above 1200nm needs a crystal temperature less than 20 deg C and hence a cooling mechanism is needed. However, since we had only heater-oven for the crystal, we have demonstrated the wavelength conversion for pump wavelengths of 1064,1117 and 1175 nm. The output after conversion will have visible and unconverted IR components at the output. Since we didn't have appropriate filters that operate at high powers to remove the IR components completely, we could not make accurate visible power measurements. However, by collecting the output visible light using a high NA fiber we have measured the spectrum of visible light generated. Fig 6. shows the pump laser spectra and the spectra of visible light generated.

5. CONCLUSION

In conclusion, we have demonstrated CW, tunable visible light generation using Raman fiber lasers as the pump source. A CW, wavelength-tunable Raman fiber laser was demonstrated earlier that could tune the output wavelength from 1-1.5 um continuously. LBO crystal was used as the nonlinear crystal for SHG and temperature tuning was done in order to achieve the appropriate phase matching condition for different pump wavelengths thereby improving the conversion efficiency. Since the operation of the heater-oven is restricted from 25-200 deg C we couldn't perform SHG efficiently for wavelengths above 1200 nm. We have operated the Raman laser at 1064nm (pump wavelength), 1117 and 1175 nm respectively at 10W CW power. The SHG of the laser at these pump wavelengths generated are at 532,558 and 587 nm respectively. By using a narrow linewidth, polarized laser source in a resonant cavity configuration the efficiency of conversion can be improved. And by using a tunable Yb laser as the pump source, the Raman stokes wavelengths can also be tuned, thereby tuning the SHG wavelengths in the visible region.

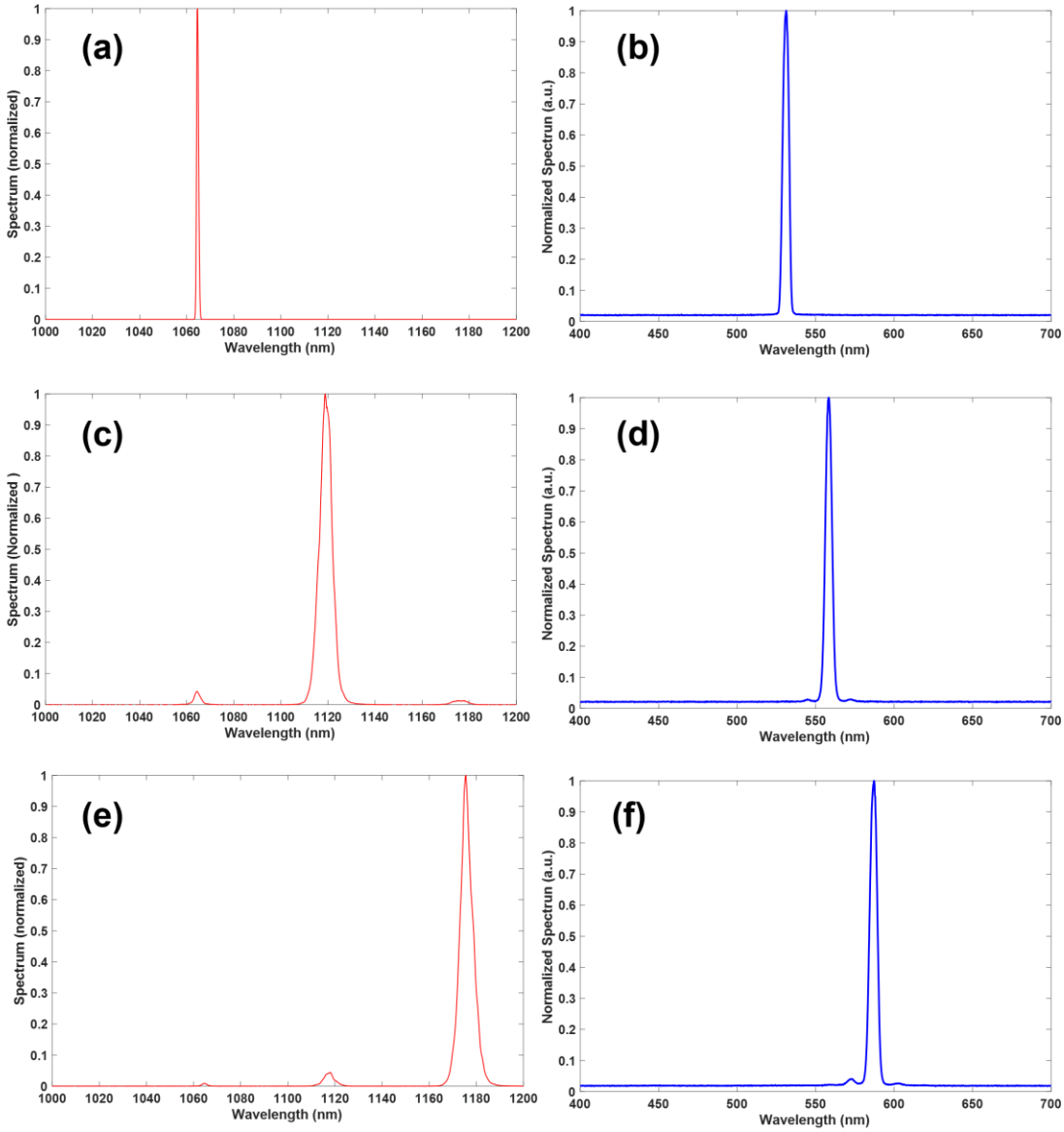

Fig 6 : Figure shows the pump laser spectra and the frequency doubled output spectra (visible) (a)1064nm (b)532 nm (c) 1117nm (d) 558nm (e) 1175nm (f) 587nm.

6. ACKNOWLEDGEMENTS

The authors would like to thank SPIE and Tata Trust Travel Grant for sponsoring the travel to the conference.

7. REFERENCES

[1] Yan Feng, Luke R. Taylor, and Domenico Bonaccini Calia, "25 W Raman-fiber-amplifier-based 589 nm laser for laser guide star," Opt. Express **17**, 19021-19026 (2009)

[2] Luo P-L, Hu J, Feng Y, Wang L-B and Shy J-T, 2015 “Doppler-free intermodulated fluorescence spectroscopy of 4He 23P–31,3D transitions at 588 nm with a 1W compact laser system”, Appl. Phys. B 120 279–84.

[3] Al-Watban, Farouk AH, et al. "Visible lasers were better than invisible lasers in accelerating burn healing on diabetic rats." Photomedicine and laser surgery 27.2 (2009): 269-272.

[4] Kru, J., and Wolfgang Kautek. "Femtosecond-pulse visible laser processing of transparent materials." Applied surface science 96 (1996): 430-438.
[5] C. Jauregui, J. Limpert, and A. Tünnermann, “High-power fibre lasers, ”Nature Photonics 7, 861–867 (2013).
[6] V. R. Supradeepa, Y. Feng, and J. W. Nicholson, “Raman fiber lasers,” Journal of Optics 19(2), 023001 (2017).
[7] V. R. Supradeepa and Jeffrey W. Nicholson, "Power scaling of high-efficiency 1.5 μm cascaded Raman fiber lasers," Optics Letters 38, 2538-2541 (2013).
[8] S. Turitsyn, S. Babin, A. E. El-Taher, P. Harper, D. V. Churkin, S. I. Kablukov, J. D. Ania-Castañón, V. Karalekas, and E. V. Podivilov, “Random distributed feedback fibre laser,” Nature Photonics 4(4), 231 (2010).
[9] S. A. Babin, I. D. Vatnik, A. Yu. Laptev, M. M. Bubnov, and E. M. Dianov, “High-efficiency cascaded Raman fiber laser with random distributed feedback,” Optics Express 22(21), 24929–24934 (2014).
[10] L. Zhang, H. Jiang, X. Yang, W. Pan, and Y. Feng, “Ultra-wide wavelength tuning of a cascaded Raman random fiber laser,” Optics Letters 41(2), 215–218 (2016).
[11] V. R. Supradeepa, Jeffrey W. Nichsolson, Clifford E. Headley, Man F. Yan, Bera Palsdottir, and Dan Jakobsen, "A high efficiency architecture for cascaded Raman fiber lasers," Optics Express 21, 7148-7155 (2013).
[12] S. Arun, V. Choudhury, R. Prakash and V. R. Supradeepa, "High Power, Tunable, Continuous-Wave Fiber Lasers in the L-Band Using Cascaded Raman Amplifiers," in IEEE Photonics Technology Letters, vol. 30, no. 15, pp. 1412-1415, 1 Aug.1, 2018.
[13] V. Balaswamy, S. Arun, Santosh Aparanji, Vishal Choudhury, and V. R. Supradeepa, "High-power, fixed, and tunable wavelength, grating-free cascaded Raman fiber lasers," Optics Letters 43, 1574-1577 (2018).
[14] S. Arun, V. Balaswamy, S. Aparanji, and V. R. Supradeepa, "High Power, Grating-Free, Cascaded Raman Fiber Lasers," in *2017 European Conference on Lasers and Electro-Optics and European Quantum Electronics Conference*, (Optical Society of America, 2017), paper CJ_2_4.