Transient Stability Assessment using Artificial Neural Networks

S. Krishna, K.R. Padiyar
Department of Electrical Engineering
Indian Institute of Science
Bangalore 560 012 INDIA

Abstract— **Online transient stability assessment(TSA) of a power system is not yet feasible due to the intensive computation involved. Artificial neural networks(ANN) have been proposed as one of the approaches to this problem because of its ability to quickly map nonlinear relationships between the input data and the output. In this paper a review of the previously published papers on TSA using ANN is presented. The paper also reports the results of the application of ANN to the problem of TSA of a 10 machine 39 bus system.**

I. Introduction

The security assessment of a power system requires analysis of the dynamic system behaviour under a prescribed set of events known as contingencies. Conventionally this is done by simulating the system nonlinear equations. Since the stability limits cannot be determined from a single simulation, more than one simulation is required. The large size of the system adds to the complexity. Hence online transient stability assessment(TSA) by simulation is not yet feasible.

The difficulties mentioned above can be overcome to a large extent by the method of energy function for direct stability evaluation. This method involves comparison of the value of the energy function at the instant of last switching $W(t_c)$ to the critical value W_{cr}; the system is transiently stable if $W(t_c) < W_{cr}$. But this method is not yet suitable for online computation.

Artificial neural networks(ANN) have been proposed as an alternative method for the TSA problem by many authors since Sobajic et al.[1] explored the capability of ANN for TSA. Since trained ANN can quickly map nonlinear relationship between input data and the ouput, they are considered to be suitable for online use. There are a number of publications on ANN application to TSA. In this paper, a review of some of the previously published papers on this topic is presented. The paper also reports the results of ANN application to the determination of stability and mode of instability for a 10 machine 39 bus system.

II. ANN applied to TSA

The main objectives of online TSA are fast evaluation and accuracy of results. ANN is a possible alternative because of its fast response. Application of ANN consists of the following steps.

A. Data generation

It is important to obtain a set of training patterns that adequately covers the space of possible operating conditions. Different operating conditions are generated by different combinations of load levels and network topology. Since ANN are known to do interpolation very well but hardly any extrapolation, the test patterns are required to be within the range of training patterns.

B. Selection of input variables

The selection of inputs is an important factor in the successful use of ANN. It is obvious that the candidates for inputs are those independent variables which influence the output. Different prefault variables, variables during fault and postfault variables have been used as input variables in the previous studies.

C. Selection af ANN architecture

Multilayered backpropagation network is the most commonly used ANN in the previously published papers on this subject. It has also been successfully applied in many other practical applications. A few authors have applied functional link network(FLN) [2,3] for TSA.

D. Training the ANN and testing

The advantage of ANN is that it can be used for online applications, since most of the computations are done offline and negligible online computation is required. Data generation and ANN training constitute offline computation. Usually training is the most time consuming part in the design and use of ANN. For a given ANN architecture many training algorithms exist and a choice has to be made judiciously to obtain fast and efficient training of the ANN.

III. Review

A large number of publications have appeared on ANN application to TSA since the paper by Sobajic et al.[1]. Sobajic et al. used ANN for prediction of critical clearing time(CCT) for a small test power system. A good agreement between estimated and actual CCT was obtained considering different operating conditions and topologies.

0-7803-5812-0/00/$10.00©2000IEEE

Djukanovic et al.[2] used individual energy function normalized by the critical value of global energy function, evaluated at fault clearing time to predict energy margin and stability. A function of generator rotor acceleration and elements of admittance matrix were used to identify mode of instability and predict CCT. In both cases a functional link network(FLN) which assumes a flat computation platform(no hidden layers) was implemented. The network was trained for faults on generator buses by restoring the network topology and for faults on non-generator buses by tripping the faulted line, at different load levels.

In [3], Sobajic et al. proposed combined use of unsupervised and supervised learning for TSA. An unsupervised algorithm was proposed for clustering large amount of data based on similarities. Covariance analysis was performed on clustered data to determine the features of the input pattern which are highly correlated. In addition to the original input features, enhanced features obtained by taking the products of highly correlated features were included to train a FLN to synthesize the CCT. Learning rate for FLN is generally many times higher than that for backpropagation networks with hidden layers of neurons.

Fast pattern recognition and classification of dynamic security states were reported by Zhou et al.[4]. A feedforward network was trained using energy margin and unstable equilibrium point angles of advanced generators as inputs with power system vulnerability as the output. Power system vulnerability is an indicator of dynamic security obtained by the combination of transient energy margin and sensitivity of energy margin to a changing system parameter. Accurate vulnerability classification was obtained for the test cases using active power generation as the changing parameter.

Hobson et al.[5] have reported that ANN have difficulty in returning consistently accurate answers under varying network conditions. ANN was trained to predict CCT for three phase faults, for two systems(4 generator and 20 generator) at 5 load levels and 3 different topologies. A fault at a bus is considered to simulate a line fault close to that bus and the fault is cleared by tripping the faulted line. This was repeated for every line with fault at both ends. Unacceptably large errors were reported for both training and testing data.

Edwards et al.[6] made use of statistical information for feature selection. 1916 composite indices were generated for 838 training contingencies(three phase short circuit, loss of line, loss of generation, loss of load). Performing correlations, 18 composite indices were selected as inputs to the ANN which was trained to determine stability. The ANN was conservative in its stability classification.

In [7], Aboytes et al. used ANN to predict stability of a 53 generator system which is part of Mexican power system. Training patterns were organised by dividing them into different sets and using separate ANN for each set. Best results were obtained by separating patterns by type of contingencies and voltage level.

Mansour et al.[8] used ANN to predict energy margin and largest angular swing for two large systems viz. B.C.Hydro(209 generators) and Hydro Quebec(87 generators). The ANN was able to perform classification with an error of 4% and determine the stability margin with an average error of 5%.

The above papers were concerned with transient stability assessment for preventive control. Chih-Wen Liu et al.[9] utilised the ability to rapidly acquire synchronized phasor measurements to evaluate transient stability for emergency control. With the advent of phasor measurement units aided with global positioning systems, it is possible to track the dynamics of a power system. The authors of [9] applied a novel fuzzy neural network to real time transient stability prediction using synchronized phasor measurements.

Security assessment through boundary visualization provides the operator with knowledge of system security in terms of easily monitorable operating parameters. McCalley et al.[10] presented a methodology for online security boundary visualization using neural networks. Feature selection was done using genetic algorithms. The procedure for this methodology is applied to thermal overload, voltage instability and transient instability problems to obtain deterministic boundaries.

Conventionally, TSA involves determination of CCT. This has probably influenced many authors [1,2,3,5] to train ANN to predict CCT. In [2,6,7,9], system stability for large disturbances is obtained as the output. Energy margin is obtained as output in [2,8]. In [2], mode of instability is also obtained as an output of an ANN. System vulnerability is obtained as the ANN output in [4].

In almost all the papers prefault variables and variables during fault are used as inputs to the ANN. In [4], energy margin and unstable equilibrium point angles of advanced generators are used as inputs to obtain system vulnerability. In [9], postfault values of generator rotor angles, velocities and acceleration are used as inputs.

Supervised learning involves training an ANN to obtain a desired output, whereas unsupervised learning involves processing the input variables with no knowledge of the output. All the authors have used supervised learning techniques to train the ANN. In [3], an unsupervised learning algorithm was proposed for clustering data based on similarities. Covariance analysis was performed on clustered data to obtain additional features which were used to train the ANN. In [6], correlation analysis was performed to arrive at the most suitable input variables.

Multilayered backpropagation network is the most com-

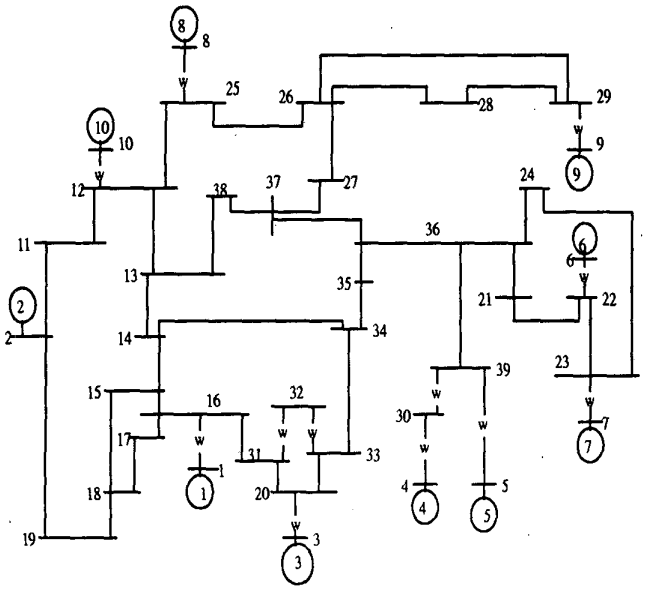

Fig. 1. One-line diagram of the 10 generator 39 bus New England System

monly used ANN. FLN was used in [2,3].

IV. A CASE STUDY

The test power system is the 10 generator 39 bus New England system shown in fig. 1. The data for the system is taken from [11]. The application of the methodology is described below.

A. Generation of training and test patterns

Classical model is assumed for generators and loads are considered to be constant admittances. The objective of this study is to determine stability and mode of instability for unstable cases, for three phase faults at different locations. An increase of 10%, 20% and 30% load above nominal load is considered in addition to the nominal load for stability prediction whereas only nominal load and 10% overload are considered for mode of instability prediction. The power factors of the loads are maintained at their nominal values. The generated powers of all generators are increased proportionately. For each load level, the original network and the networks obtained by removing one of the 34 lines are considered. This is an extensive study as far as the number of network topologies is concerned. For each load level and network topology, three phase faults are simulated on all lines close to the buses connected by the line; the fault is cleared by tripping the faulted line. A fault clearing time of 6 cycles is considered to get many unstable cases. Simulation is done for a duration of 5 seconds. For the purpose of this study, the system is considered to be unstable if the difference between any two rotor angles at 5 seconds is greater than 180^0. A total of 8344 training patterns were generated by time domain simulation.

Stability and mode of instability are predicted by training two separate ANN's. Two sets of test patterns are generated for each ANN. The first test set for first ANN which is trained to predict stability, includes three phase faults at different buses selected randomly with load levels between 100% and 130% of nominal load selected randomly. The first test set for second ANN which is trained to predict mode of instability, includes three phase faults at different buses selected randomly with load levels between 100% and 110% of nominal load selected randomly. The second test set for both ANN's considered load levels selected randomly in the same ranges as those for the first set, but three phase faults were simulated at random locations on different lines.

While generating training and test patterns, cases in which the system is separated into two islands are delibrately avoided since it requires to predict stability and mode of instability for both islands.

B. Input and output variables

The inputs include 10 prefault variables and 30 postfault variables. The prefault variables are the mechanical power input to all the generators. The postfault variables are the rotor angles of all the generators at the instant of fault clearing and 4 cycles after clearing, and the absolute values of the diagonal elements of the admittance matrix obtained by replacing the generator circuit by its Norton's equivalent and reducing the network admittance matrix to include only generator terminal nodes. The first ANN for predicting stability gives a '1' as output for stable cases and '0' as output for unstable cases. The second ANN for predicting mode of instability for unstable cases has 10 outputs; the output is '1' for advanced generators and '0' for the remaining generators. The rotor angles are obtained by measuring the voltage and current phasors at the generator terminals.

$$E\angle\delta = V\angle\theta + jx'_d I\angle\phi$$

where E is the voltage behind the transient reactance of the generator, δ is the rotor angle, $V\angle\theta$ is the voltage phasor at the generator terminals, $I\angle\phi$ is the current phasor fed by the generator and x'_d is the transient reactance of the generator.

The ANN trained using the above mentioned inputs can be used for TSA for emergency control. Emergency control is justified in many cases where preventive control is prohibitively costly. The information about the mode of instability can be used for emergency control actions like system separation.

C. ANN architecture

Multilayered backpropagation network is the most commonly used network for both function approximation and

classification. In this paper, a backpropagation network with 2 hidden layers of neurons having hyperbolic tangent transfer function(fig.4) and output layer of linear neurons is used for training. For the first ANN used to predict stability(fig. 2), 9 neurons in the first layer and 8 neurons in the second layer were used. For the second ANN used to predict mode of instability(fig. 3), 8 neurons were used in both layers. While testing, all outputs are passed through a hardlimiter with a threshold of 0.5, to obtain either a '0' or '1' as output.

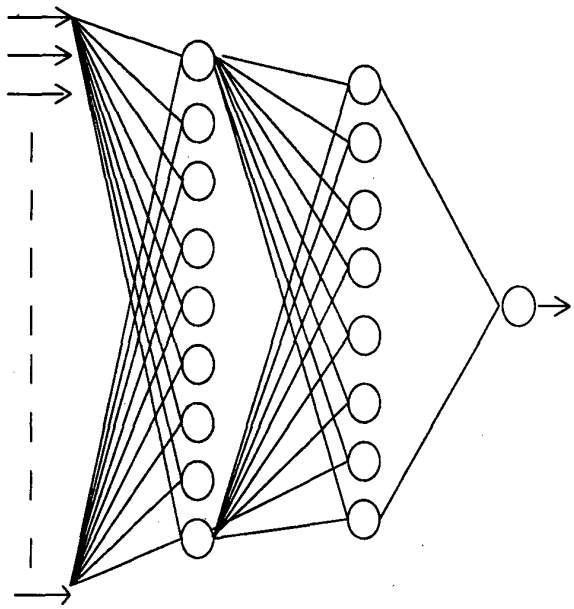

Fig. 2. ANN used to predict stability

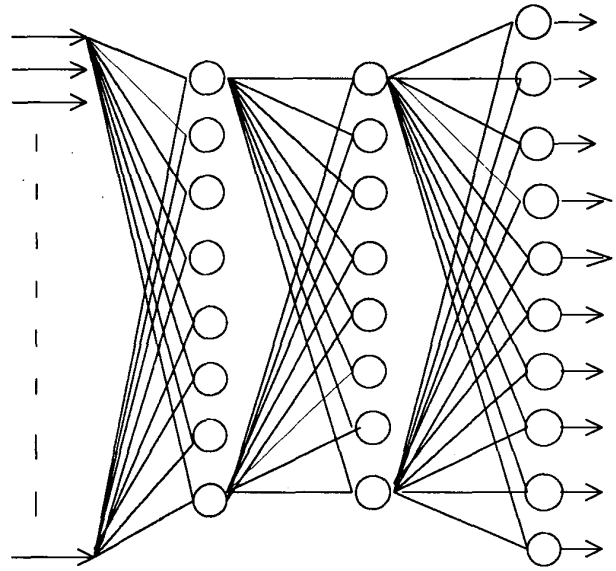

Fig. 3. ANN used to predict mode of instbility

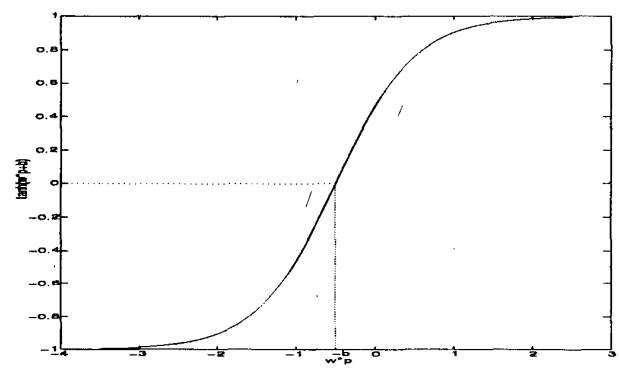

Fig. 4. Hyperbolic tangent transfer function

D. Training and testing

Training was initially performed using gradient descent method. It was found that this method is unacceptably slow. Levenberg-Marquardt algorithm which is a variation of Newton's method is faster and is used for our work. The ANN is trained by minimizing the sum-squared error *sse*.

$$sse = \sum_{i=1}^{N} e_i^2 = \mathbf{e}^T\mathbf{e}$$

where e_i are the elements of the error vector e. N is the product of the number of ANN outputs and the number of training patterns. If **w** denotes the vector of weights and biases, then Levenberg-Marquardt update rule is

$$\Delta\mathbf{w} = (\mathbf{J}^T\mathbf{J} + \mu\mathbf{I})^{-1}\mathbf{J}^T\mathbf{e} \qquad (1)$$

where **J** is the Jacobian matrix of derivatives of each error to each element of **w**, μ is a scalar and **I** is an identity matrix. If μ is very large, the above expression for weight update approximates gradient descent, while if it is small it becomes Gauss-Newton's method. Gauss-Newton's method is faster and more accurate near an error minimum, so the aim is to shift to Gauss-Newton's method as quickly as possible. Hence, μ is decreased after each successful step and increased only when a step increases the error. A limitation of this method is that it requires a large amount of memory. Training was done on a workstation having RAM of 128 MB, using Matlab neural network toolbox. The performance of the first ANN in predicting stability for training and test sets is given in table I. Table II gives the performance of the second ANN in predicting mode of instability.

A single simulation of 5 seconds duration requires nearly 2 seconds of CPU time. It takes nearly 70 μs to predict stability and nearly 130 μs to predict mode of instability using ANN.

V. Discussion

For multilayered backpropagation neural networks, there is no systematic method of deciding the number of layers and the number of neurons in each layer. Though theoret-

TABLE I
PERFORMANCE OF ANN IN PREDICTING STABILITY

	Training set	Test set #1	Test set #2
Number of stable cases	5456	608	647
Number of unstable cases	2888	392	353
Total number of cases	8344	1000	1000
False alarm(%)	71(1.3%)	33(5.43%)	22(3.4%)
False dismissal(%)	66(2.29%)	22(5.61%)	26(7.37%)
Total error(%)	137(1.64%)	55(5.5%)	48(4.8%)

TABLE II
PERFORMANCE OF ANN IN PREDICTING MODE OF INSTABILITY

	Training set	Test set #1	Test set #2
Number of cases	877	387	313
Error(%)	35(3.99%)	33(8.53%)	27(8.63%)

ically a single layer of neurons can approximate any given function[12], a two-layered ANN is more powerful than a single layered ANN. Hence two layers of neurons were used in our work. Training was initially performed with few neurons in both layers. The number of neurons were gradually increased till satisfactory performance was obtained.

Training using gradient descent method was found to be unacceptably slow and hence Levenberg-Marquardt algorithm was used. A limitation of this method is the requirement of a large amount of memory. The amount of memory required depends on the number of weight and bias parameters, number of outputs and the number of training patterns. The ANN used to predict mode of instability has ten outputs. Hence only nominal load and 10% overload were considered due to the memory constraint.

The selection of inputs is an important factor in the successful use of ANN. In most of the previous papers, selection of inputs is based on intuition. In [3] and [6], statistical information is used to arrive at the most suitable inputs. In [2], normalized values of individual energy functions of the generators evaluated at the clearing time were used as inputs to predict stability. The concept of individual energy function characterizes the transient stability as a local phenomenon in contrast to the total energy function.In [6], 1916 composite indices were generated and performing correlations, 18 composite indices were selected as inputs. In [7], 12 steady state variables were used as inputs and it was reported that dynamic variables did not improve the results. In [9], postfault rotor angles at three instants, two velocities and one acceleration of all the generators were used as inputs to predict stability. This is based on the notion that the stability can be predicted from the postfault rotor angles irrespective of the load level and network topology. The transient stability of a power system is a dynamic phenomenon and depends on the system parameters and initial postfault conditions. A set of differential equations can be solved numerically if initial or boundary conditions are given. This suggests that the inputs to the ANN should be the varying parameters and the initial or boundary conditions for the postfault system. The varying parameters are the mechanical power input to the generators, the internal voltage of the generators and the elements of the network admittance matrix. It is impractical to use all the parameters as inputs. The independent parameters which have a significant influence on the output are to be selected as inputs. In our work, the absolute values of diagonal elements of the reduced admittance matrix and mechanical power inputs were selected as inputs in addition to postfault rotor angles at two instants. The same inputs were used to predict both stability and mode of instability.

In [2], correct stability prediction was obtained for all cases. Faults at only 4 buses and 5 load levels were considered for training and testing. Faults at many locations have to be considered to evaluate the capability of ANN. In [7], training patterns were divided into many sets and separate ANN was used to predict stability for each set. Classification errors of less than 1% for training set and less than 5% for test set were obtained. In [9], base case was obtained by increasing all real power loads by 35% and operating points were generated from base case by considering random changes of key parameters like load, shunt compensation, active and reactive generation scheduling, and topology. Stability was predicted for faults at different locations and durations for each operating point. Classification errors of less than 1% for training set and less than 6% for test set were obtained. In the previous papers, very few prefault network topologies were considered. In our work, 34 prefault network topologies are considered. Since a fault is cleared by tripping the faulted line, the number of postfault network topologies is nearly 1000. The errors in stability prediction are comparable with those obtained in [2], [7] and [9]. Only one paper [2] obtains mode of instability as the output. The ANN was successful in predicting

mode of instability for faults at 4 buses with the same prefault network for all cases. Again our work considered 34 prefault network topologies with loads between 100% and 110% of nominal load. Prediction of mode of instability was not accurate enough for both training and test sets. This suggests that a different set of inputs or additional inputs have to be used to predict mode of instability.

ANN usually gives errors for both stable and unstable cases. In [9], and in our work as shown in table I, percentage of false dismissals is more than percentage of false alarms for the training as well as the test sets. But in [6], conservative results were obtained; the ANN did not misclassify any unstable contingency as stable.

VI. Conclusion

In most of the previously published papers on ANN application to TSA, ANN is used to predict system stability to arrive at preventive control measures. Preventive control may be prohibitively costly in many cases. One of the papers applied a fuzzy neural network to predict stability in real time using phasor measurements.

Use of ANN for predicting stability and mode of instability was studied. The study is comprehensive as far as the number of network topologies is concerned. The number of input variables and training patterns depend on the size of the power system. For the system considered, training methods based on gradient descent were found to be unacceptably slow. Levenberg-Marquardt training algorithm was found to be quite faster than gradient descent methods; but it has the limitation that it requires large amount of memory.

In the case studies, stability prediction was done for loads ranging from 100% to 140% of nominal load. Accurate classification was obtained for the test sets which included line faults, though the ANN was trained for only bus faults. The percentage of false dismissals is greater than percentage of false alarms for the training set as well as the test sets. In case of mode of instability, prediction was not accurate enough, though loads ranging from only 100% to 110% of nominal load were considered.

References

[1] Dejan J. Sobajic and Yoh-Han Pao, "Artificial neural-net based dynamic security assessment for electric power systems", *IEEE Trans. Power Systems*, vol. 4, no. 1, Feb. 1989, pp. 220-228.

[2] Miodrag Djukanovic, Dejan J. Sobajic and Yoh-Han Pao, "Neural-net based unstable machine identification using individual energy functions", *International Journal of Electrical Power and Energy Systems*, vol. 13, no. 5, Oct. 1991, pp. 255-262.

[3] Yoh-Han Pao and Dejan J. Sobajic, "Combined use of unsupervised and supervised learning for dynamic serurity assessment", *IEEE Trans. Power Systems*, vol. 7, no. 2, May 1992, pp. 878-884.

[4] Qin Zhou, Jennifer Davidson, A. A. Fouad, "Application of artificial neural networks in power system security and vulnerability assessment", *IEEE Trans. Power Systems*, vol. 9, no. 1, Feb. 1994, pp. 525-532.

[5] E. Hobson and G. N. Allen, "Effectiveness of artificial neural netwoeks for first swing stability determination of practical systems, *IEEE Trans. Power Systems*, vol. 9, no. 2, May 1994, pp. 1062-1067.

[6] A. R. Edwards, K. W. Chan, R. W. Dunn, A. R. Daniels, "Transient stability screening using artificial neural networks within a dynamic security assessment system", *IEE Proc.-Generation, Transmission and Distribution*, vol. 143, no. 2, Mar. 1996, pp. 129-134.

[7] F. Aboytes and R. Ramirez, "Transient stability assessment in longitudinal power systems using artificial neural networks", *IEEE Trans. Power Systems*, vol. 11, no. 4, Nov. 1996, pp. 2003-2010.

[8] Yakout Mansour, A. Y. Chang, Jeyant Tamby, Ebrahim Vaahedi, B. R. Corns, M. A. El-Sharkawi, "Large scale dynamic security screening and ranking using neural networks", *IEEE Trans. Power Systems*, vol. 12, no. 2, May 1997, pp. 954-960.

[9] Chih-Wen Liu, Mu-Chun Su, Shuenn-Shing Tsay, Yi-Jen Wang, "Application of a novel fuzzy neural network to real-time transient stability swings prediction based on synchronized phasor measurements", *IEEE Trans. Power Systems*, vol. 14, no. 2, May 1999, pp. 685-692.

[10] James D. McCalley, Guozhong Zhou, Vincent Van Acker, Matthew A. Mitchell, Vijay Vittal, Shimo Wang, J. A. Pecas Lopes, "Power system security boundary visualization using neural networks", *Bulk Power System Dynamics and Control IV - Restructuring*, Aug. 24-28, 1998, Santorini, Greece.

[11] K. R. Padiyar, *Power system dynamics: stability and control*, Interline Publishing Pvt. Ltd., 1996, pp. 597-601.

[12] Simon Haykin, *Neural networks - A comprehensive foundation*, Prentice Hall Internation, p. 208.