Some Experiments on Brush Contact Resistance.

By Prof. Alfred Hay, D. Sc., M. H. Bhatt and J. M. Parikh.

In view of the renewed interest which is now being taken in the problem of determining the voltage drop at the brush contacts of continuous-current machines, as evidenced by the large number of Papers which have recently appeared on this subject*, the following account of some experiments bearing on this problem may not be without interest, especially as one of the effects distinctly observed does not appear to have been previously noticed by other experimenters. The experiments were carried out in the electrotechnical laboratory of the Indian Institute of Science, Bangalore.

Two machines similar in every respect, each having an output of about 5 kw. at 100 volts and 750 revs. per min., were used in the experiments. One of these was run as a motor, and was coupled to the other, which was thus driven mechanically. By means of a very sensitive electrical speed indicator, changes of speed amounting to 0·1 per cent. could be detected. Each armature was provided with slip-rings for two and three-phase currents, and in addition each had a "dead" coil connected to two small slip-rings.

The main object of the experiments was to ascertain in how far the brush-contact drop was affected by the rotation of the commutator. According to Baily and Cleghorne* the difference between the values at standstill and when running is not very marked. A similar result has been obtained by Arnold†. According to the recently published Paper by L. Gratzmuller,

* See the following Papers in the "Proc." A. I. E. E., Vol. XXXII.: H. F. T. Erben and A. H. Freeman, "Brush Friction Losses"; H. R. Edgecomb and W. A. Dick, "Methods of Determining Brush Losses due to Contact and Friction"; C. E. Wilson, "Commutation and Brush Loss." *See also* the Paper by L. Gratzmuller in "La Lumiere Electrique," Vol. XXI., p. 324, briefly noticed in THE ELECTRICIAN, Vol. LXX., p. 1121.

* "Journal" of the Institution of Electrical Engineers, Vol. XXXVIII., p. 162.

† "Die Gleichstrommaschine," Vol. I, p. 348.

however, as soon as rotation begins to take place, a large increase, amounting to some 100 per cent., in the contact drop immediately takes place, although this increase appears to be totally unaffected by the speed, provided the latter is not actually zero.

As will be seen, our experiments tend to confirm the results arrived at by Baily and Cleghorne and Arnold, and show no indication of the large sudden rise of resistance due to rotation observed by Gratzmuller.

A set of readings connecting brush-contact drop with current was first taken with the armature stationary. The brushes had previously been carefully ground to fit the surface of the commutator. The armature experimented upon was a four-pole one having a simple wave winding and four brushes spaced 90 deg. apart. Each brush had a cross-section of $1\frac{1}{2}$ in. by $\frac{1}{2}$ in. or 0·75 sq. in., so that with a total current of 50 amperes through the armature the current density was $50/1{\cdot}5=33{\cdot}3$ amperes per square inch.

The method of experimenting was as follows: A measured current was sent through the stationary armature, and the total drop between the positive and negative brushes was measured, the voltmeter leads being placed close to the contact surfaces of the brushes. The drop due to the resistance of the winding was then obtained. On subtracting the latter from the former, the value of the sum of the brush-contact drops was found.

All who have experimented on brush-contact drops are familiar with the puzzling uncertainty of the results frequently obtained, and the great difficulty of reproducing the same set of readings under apparently identical conditions. It is well known for instance, that if the drop be measured on a stationary armature, and the armature be then slightly displaced, a considerable change in the value of the drop may take place. If the brushes are not properly bedded on the commutator, or if the commutator has been in use for a considerable time so that the mica projects slightly above the segments, it is not difficult to see why a displacement of the armature should result in a change contact of drop. In the machine experimented on, which was a new one, the commutator had a very smooth surface, there was no indication of mica ridges between the segments, and the brushes had been ground very carefully to fit the commutator surface truly. It was found possible to

get fairly consistent sets of readings, as the following Table will show :—

TABLE I.

Readings obtained March 6, 1913.

Armature current	10	20	30	40	50
Sum of brush-contact drops	0·74	1·275	1·70	1·90	2·00

Readings obtained March 14, 1913.

Armature current ...	1	2	4	6	8	10	20	30	40	50
Sum of brush-contact drops ...	0·105	0·201	0·384	0·61	0·716	0·9	1·39	1·73	1·99	2·08

These resulted are plotted in Pig. 1, where the first set of readings is indicated by crosses, and the second by circles. It will be seen that (comparatively speaking) no very serious discrepancies are observable, although the machine had been run a good deal between the two dates on which the readings were taken.

Various methods may be employed for investigating the brush-contact drop, when the metal surface on which the brush hears is in motion. The following are the more important. (1) The slip-ring method, in which a plain ring is employed. This method has been used by Baily and Cleghorne and by Arnold.* Although it has the advantage of doing away with the complications liable to arise in the case of a commutator, the conditions of the experiment are more or lessideal, and can hardly be taken as typical of normal working conditions. (2) The short-circuited commutator method, in. which a commutator of normal construction but having its segments short-circuited by heavy copper wires, is employed. The conditions here approach those of actual practice somewhat more closely. This method has been used by H. R. Edgecomb and W. A. Dick.† (3) The ordinary commutator method, with the positive and negative brushes mounted on the same spindle side by side, but *insulated from each other*. This method has been used by Gratzmuller (*loc* cit.) and is mentioned by Arnold. ‡ The current I-lows into one of the brushes, passes *longitudinally* along the segments covered by the brushes, and

* *Loc. cit.*

† "Proc." A.T.E.E., Vol. XXXII., p. 45 1 (1013).

‡ "Die Gleich-A.-- -------1_:.-- " Vol. I. -- 280

flows out by the other brush. One objection to this method is that the uniformity of the current density over the brush-contact area may be considerably disturbed, owing to the crowding of the current towards the side edges of the brushes which face each 0 t h. (4) The method in which all the conditions are as nearly as possible identical with those of ordinary use. Neither the commutator nor the brushes are in any way altered or disturbed, the current passing in the usual way through the armature winding from the one brush set to the other. If the resistance

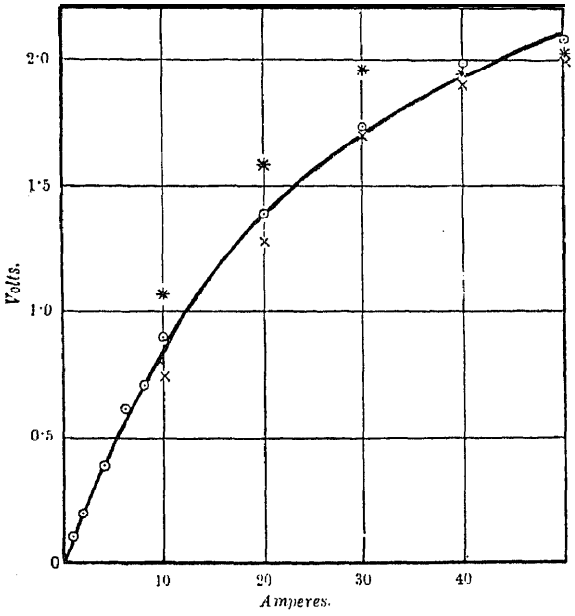

Fig. 1.

drop of the winding be known, *and if any E. M. F.s which may exist in the winding* be also known, then from the measured brush P. D. it is obviously at once possible to obtain the sum of the contact drops.

Method (4) was used in the experiments about to be described on account of its close correspondence to actual working conditions. This method was originally employed by K. C. Nandi,* who investi gated the variation of the brush-contact resistance with current by rotating an armature in its bearings with the field-magne t entirely removed.

As will be seen presently, the assumption made by Nandi that the winding does not contain any E. M. F. when a current is sent through the armature is incorrect.

* "Electrical Engineer," Vol. XXXII., p. 15 (1906).

The field frame having been entirely removed from the base plate of the machine, and the rotation E. M. F. due to the local magnetic fields reduced to zero by suitably displacing the brushes, a set of readings was obtained connecting the brush P. D. with armature current, the current being supplied by a battery of secondary cells. The arrangement of connections is shown in Fig. 2, where for the sake of simplicity only two brushes are

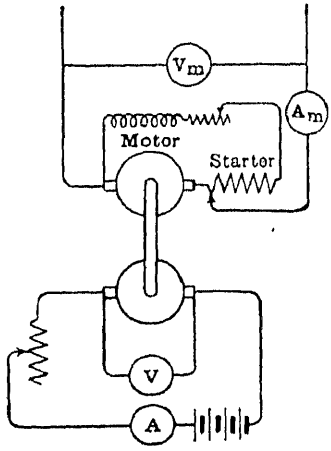

FIG. 2.

shown on each armature instead of four. The P. D. across the terminals of the motor and the current taken by it were measured by the voltmeter V_m and ammeter A_m respectively. The current sent through the armature under test and the brush P. D. were read by means of A and V respectively. By means of a variable resistance the current could be adjusted to any desired value.

It is evident that so long as the armature does not form the seat of any E. M. F., the energy supplied by the battery to the armature will be entirely utilised in producing heat at the brush contacts and in the windings. If there were no other sources of loss, the power drawn by the motor from the mains would remain unaltered when the battery current was switched on.

As soon, however, as a current is sent through the armature, this current gives rise to a magnetic field, and the rotation of the armature in this stationary field results in a certain hysteresis and eddy-current loss which requires the supply of an additional amount of *mechanical* power to the rotating armature. If the armature develops no E. M. F., it is incapable

of transforming any of the electrical power supplied by the battery into mechanical power, so that on this supposition the additional power could only come from the motor, which would therefore draw a heavier current from the mains. As a matter of fact, it was found that the closing of the battery circuit resulted in an immediate and unmistakable *decrease* of the current drawn by the motor from the mains. The inevitable conclusion is that the additional mechanical power must come from the battery, *i. e., the armature is the seat of a counter-E. M. F.* The effect in question was found to be independent of the direction of the current through the armature and the direction of rotation.

The existence of a counter E. M. F. in the armature under the conditions described is not difficult to account for when the effect of the armature field on commutation is taken into consideration. Let us first assume ideal commutation, *i. e.*,, suppose that the current during the time of short-circuit of a coil changes according to the straight-line law. Then the magnetic axis of the armature field will pass through the middle points of the brushes, as shown in Fig. 3, where for the sake of simplicity a two-pole armature is shown. To fix ideas, suppose the currents in the conductors to have the directions indicated by the two small circles, one with a dot, the other with a cross. The magnetic equator* will have the position *cd* in Fig 3. It is evident that since the total flux entering the armature between *b* and *c* is equal to that leaving it between *c* and *a*, the E. M. F. induced in the conductors lying between *b* and *c* will be equal and opposite to that induced in the conductors lying between *c* and *a*, and there will be no resultant E. M. F. The assumed condition of rectilinear commutation cannot, however, hold good for the following reasons: Taking a clockwise direction of rotation, as indicated by the arrow in Fig. 3, it is evident that the short-circuited coil is moving in the strongest part of the armature field, and has an E. M. F. induced in it which tends to maintain the original current in the coil—a well-known result. Commutation is consequently delayed, so that even after a conductor has passed the position *a* or *b* in Fig. 3, the current in it still maintains its original direction. The result is a shifting of the magnetic axis in the direction of rotation, as shown in Fig 4, where $c_1 d_1$ represents the new magnetic equator. Since now the flux entering the armature between b_1 and c_1 exceeds that leaving it between c_1 and a_1,

* By the magnetic axis is meant the surface which divides the flux into equal parts. By the magnetic equator is meant the equipotential surface which passes through those points on the armature circumference where the normal component of induction vanishes.

the E. M. F. due to the entering flux will exceed that due to the outgoing one, and there will be a resultant E. M. F. *whose direction is opposed to the armature current.* Another, and perhaps simpler, way of regarding the matter is to consider the armature ampere-turns as made up of two components *viz.*, a component

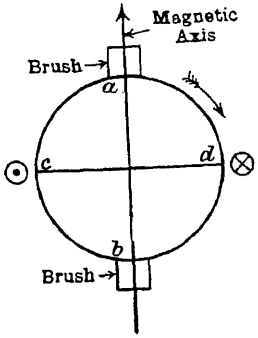

FIG. 3.

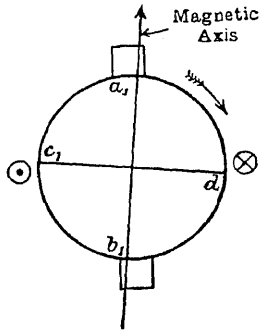

FIG. 4.

whose magnetic axis is as shown in Fig. 3, and another (due to retarded commutation) whose axis is at right angles to that of the first component, and has a direction from left to right. The field due to this latter component is easily seen to give rise to a counter E. M. F. A little consideration will show that the E. M. F. is always a *counter*-E. M. F., no matter what the direction of rotation and of the current may be.

It is clear that a correct value of the brush-contact drop can only be arrived at by taking into account the counter-E. M. F. due to imperfect commutation. In order to determine this counter-E. M. F. it is, however, necessary to know not only the change in the power supplied to the motor driving the armature, but also the additional power required to make up for the losses by hysteresis and eddy-currents due to the rotation of the armature in its own field. This additional amount of power was determined as follows :—

The armature had, as already mentioned, a "dead" coil which was connected to two slip-rings. This coil was used for plotting the flux distribution around the armature circumference by means of a Hospitalier's ondograph* whose motor was driven at synchronous speed by means of current derived from two of the slip-rings connected to the armature winding of the main continuous-current motor. The flux distribution (with 50 amperes

* For a description of this instrument, *see* "Journal" of the Institution of Electrical Engineers, Vol. XXXIII., p. 79.

flowing through the armature) obtained is shown in Fig. 5. The field frame was next replaced and the exciting current adjusted so that (the armature running on open circuit) the maximum value of the flux wave (obtained by means of the ondograph) due to the main field was the same as the maximum of the curve shown in Fig. 5. The maximum values of the induction being identical in the two cases, it was assumed that the hysteresis and eddy-current losses were approximately the same. In order to determine the value of these losses, the power taken by the motor was noted, first when the field of the machine under test was unexcited, and again when the field circuit was closed. The difference was found to be approximately 9·4 watts, and this was taken to represent the loss by hysteresis and eddy-currents which occurred when the armature was running with the field-magnet removed and a current of 50 amperes passing through it.

The field-magnet having been removed, the following set of readings was obtained, the speed of the armature being 750 revs. per min. :—

TABLE II.

Armature current	10	20	30	40	50
Brush P. D.	3·10	5·65	7·9	10·13	12·15
Winding drop	1·84	3·69	5·37	7·43	9·18
Motor current before closing armature circuit	6·47	6·4	6·36	6·38	6·4
Motor current after closing armature circuit.	6·44	6·33	6·24	6·14	6·07

The winding drop was in each case obtained immediately after the other readings had been taken for a given value of the armature current, the armature being stopped each time for the purpose.

The motor driving the armature was supplied at a constant voltage of 115, so that the change in the power taken by the motor is easily obtained from the change of current. For the smaller values of the armature current, no very great reliance can be placed on the value of the current change, as this was too small to be read with any high degree of accuracy. The ammeter A_m in Fig. 2, which measured the motor current, was a standard Weston instrument capable of reading to 0·01 ampere.

It is reasonable to suppose that the counter-E. M. F due to imperfect commutation is (so long as the law according to which commutation proceeds remains unaltered) proportional to the armature current. Taking the highest value of this current, viz., 50 amperes, we find from Table II. that the change in the

motor current on closing the circuit of the armature is 0·33 ampere. At 115 volts, this represents a decrease of about 37·9 watts in the power supplied to the motor. If to this we add the

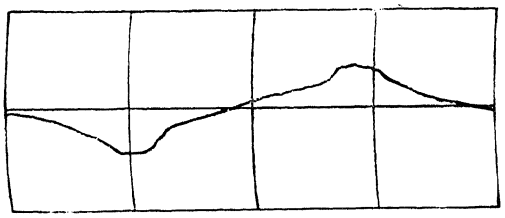

FIG. 5.

increase of power of 9·4 watts (determined as explained above) corresponding to the hysteresis and eddy-current loss due to the rotation of the armature in its own field, we get a total of 47·3 watts for the mechanical power developed by the rotating armature. The current being 50 amperes, the corresponding counter-E. M. F. is $\frac{47 \cdot 3}{50} = 0 \cdot 95$ volt, say. On the assumption that the counter-E. M. F. is proportional to the current, we obtain the following relation connecting these two quantities :—

Armature current	10 ...	20 ...	30 ...	40 ...	50
Counter-E. M F.	0·19 ...	0.38 ...	0·57 ...	0 76 ...	0·95

On adding the counter-E. M. F. to the winding drop and subtracting the sum from the brush P. D., we obtain the sum of the contact drops at the positive and negative brushes. The results are as follows:—

Armature current	10 ...	20 ...	30 ...	40 ...	50
Total brush-contact drop ...	1·07 ...	1·58 ...	1·96 ...	1 94 ...	2·02

These results have been plotted in Fig. 1, where they are indicated by asterisks. It will be seen that although the drop corresponding to lower values of the current is in excess of that at standstill, there is practically no difference for the higher values of the current, and the actual difference throughout the entire range of currents is never very great.

It would thus appear permissible, when analysing the losses, to assume that the brush-contact loss when the machine is running is, for all practical purposes, identical with that which occurs in a stationary armaure, so that this loss could be easily determined by taking a set of readings with the armature at rest.

Temperature is known to exert a marked effect on the brush-contact drop. The experiments described above were

carried out with the commutator and brushes practically at the normal temperature of the room—about 28°C. (82°F.). If it is desired to determine the brush-contact drops for various currents at the normal working temperature of the machine, this might be done by taking a set of readings with the armature stationary immediately after the heat test of the machine.

It is difficult to reconcile the above results with those recently published by L. Gratzmuller, who obtains such enormous differences between the stationary and running-contact drops. Although Gratzmuller's results have only just been published, they were actually obtained in 1902, more than 11 years ago. It is quite possible that owing to the state of the commutator a considerable amount of vibration (not necessarily visible) of the brushes may have taken place, in which case the results would be capable of a simple explanation.