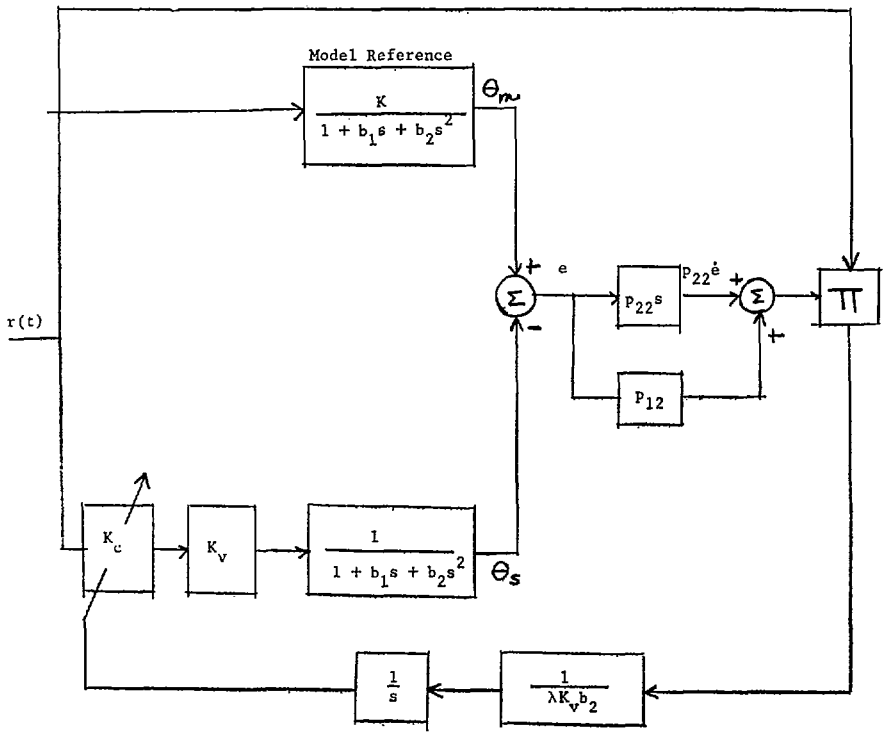


Fig. 3. Suggested Liapunov redesign.

not conclude that the system is asymptotically stable if $r(t)$ is not constant. However, it is stable and should tend to operate near $e=0$, whereas the design using the Hermite matrix may not.

RICHARD V. MONOPOLI
Dept. of Elec. Engrg.
University of Massachusetts
Amherst, Mass.

## Stability of Linear Time-Invariant Systems

### INTRODUCTION

It is well known that the stability of a linear time-invariant system can be determined using a Liapunov function of the quadratic form. However, for establishing the asymptotic stability of such a system for all linear negative feedback gains in a given range, a Liapunov function which yields both necessary and sufficient conditions has not been available so far. This correspondence presents such a function and affirms a recent conjecture of Narendra.[1] The interest in this problem is due to its being a limiting case of the Lur'e problem.

Manuscript received December 30, 1966.

[1] K. S. Narendra, "A conjecture on the existence of a quadratic Liapunov function for linear time-invariant feedback systems," *Proc. 4th Allerton Conf. on Circuit and System Theory* (University of Illinois, Urbana), 1966.

### THE PROBLEM

Consider the system defined by the equations

$$\dot{x} = Ax - bK\sigma$$
$$\sigma = h^T x \tag{1}$$

which represents a transfer function

$$G(s) = h^T(sI - A)^{-1}b \tag{2}$$

with a linear negative feedback gain $K$.

$A$ is an $(n \times n)$ stable matrix, $x$, $b$, and $h$ are real $n$ vectors, and $\sigma$ is a scalar function of time.

It is required to find a Liapunov function which yields necessary and sufficient conditions for the asymptotic stability of the system for all feedback gains $K$ in $(0, \overline{K})$.

### PRELIMINARIES

Let $\mu_k$ $(k = 1, 2, \cdots)$ be frequencies such that

$$\operatorname{Im} G(j\mu_k) = 0$$

and

$$\operatorname{Re} G(j\mu_k) + \frac{1}{\overline{K}} \geq 0.$$

Let $B_k$ be a matrix associated with $\mu_k$ defined by

$$B_k = \frac{\gamma_k}{2\beta_k}(-j\mu_k I + A)^{-1} \tag{3}$$

where $\gamma_k$, $\beta_k \geq 0$ ($\gamma_k = 0$ when $\beta_k = 0$).

Let

$$R_k = B_k + B_k^*$$

and

$$\mathcal{J}_k = j(B_k - B_k^*) \tag{4}$$

where * denotes the complex conjugate. Then

$$h^T R_k b = -\frac{\gamma_k\left(d_k - \frac{1}{\overline{K}}\right)}{\beta_k}$$

where

$$d_k = G(j\mu_k) + \frac{1}{\overline{K}} \geq 0$$

and

$$h^T \mathcal{J}_k b = 0. \tag{5}$$

Further, from (3) and (4) it follows that

$$-R_k A + \frac{\gamma_k}{\beta_k} I + \mu_k \mathcal{J}_k = 0$$
$$\mathcal{J}_k A + \mu_k R_k = 0. \tag{6}$$

In addition, it can be shown that[2,3]

$$\operatorname{Re}\left[h^T R_k (j\omega I - A)^{-1} b\right] = \operatorname{Re}\left[\frac{\gamma_k}{\beta_k}\frac{j\omega}{(j\omega)^2 + \mu_k^2}\left(G(j\omega) + \frac{1}{\overline{K}}\right)\right] \tag{7}$$

for all real $\omega$.

### THE LIAPUNOV FUNCTION

Consider as a possible Liapunov function[2,3]

$$V = \tfrac{1}{2}x^T P x + \tfrac{1}{2}\beta_0 K\sigma^2 + \sum_k \beta_k \frac{K}{2}\left[(h^T R_k x)^2 + (h^T \mathcal{J}_k x)^2\right] \tag{8}$$

where $P > 0$.

The derivative $\dot{V}$ along the trajectories of the system (1) is given by

$$\begin{aligned}\dot{V} = {} & \tfrac{1}{2}x^T(A^T P + PA)x \\ & - K\sigma x^T[Pb - \beta_0 A^T h] - \beta_0 h^T b \\ & + \sum_k \beta_k K[(h^T R_k x)(h^T R_k A x) \\ & + (h^T \mathcal{J}_k x)(h^T \mathcal{J}_k A x)] \\ & - \sum_k \beta_k K^2[(h^T R_k x)\sigma(h^T R_k b) \\ & + (h^T \mathcal{J}_k x)\sigma(h^T \mathcal{J}_k b)].\end{aligned}$$

Using (5) $\dot{V}$ can be rewritten as,

$$\begin{aligned}\dot{V} = {} & \tfrac{1}{2}x^T(A^T P + PA)x - \beta_0 h^T b(K\sigma)^2 \\ & - K\sigma x^T[Pb - \beta_0 A^T h] \\ & + \sum_k \beta_k K[(h^T R_k x)(h^T R_k A x) \\ & + (h^T \mathcal{J}_k x)(h^T \mathcal{J}_k A x)] \\ & + \sum_k K^2 \gamma_k\left(d_k - \frac{1}{\overline{K}}\right) \cdot h^T R_k x \sigma.\end{aligned} \tag{9}$$

[2] K. S. Narendra and C. P. Neuman, "Stability of a class of differential equations with a single monotone nonlinearity," *J. SIAM on Control*, vol. 4, pp. 295–308, May 1966.

[3] M. A. L. Thathachar, M. D. Srinath, and H. K. Ramapriyan, "Solution of a modified Lur'e problem," submitted for publication in *IEEE Trans. on Automatic Control*.

Adding and subtracting the following terms,

$$1)\ K\delta\sigma^2\left(1-\frac{K}{\overline{K}}\right)$$

$$2)\ \gamma_k K\sigma(h^T R_k x)$$

$$3)\ \alpha_k K(h^T R_k x)(h^T \mathcal{G}_k x),$$

$\dot{V}$ takes the form

$$\begin{aligned}\dot{V} = {} & \tfrac{1}{2}x^T(A^TP+PA)x \\ & -\left(\beta_0 h^T b+\frac{\delta}{\overline{K}}\right)(K\sigma)^2 \\ & -K\sigma x^T\Big[Pb-\beta_0 A^T h-\delta h-\sum_k \gamma_k \\ & \cdot\left(1-\frac{K}{\overline{K}}\right)R_k^T h-\sum_k \gamma_k d_k K R_k^T h\Big] \\ & -\sum_k K(h^T R_k x)h^T \\ & \cdot[-\beta_k R_k A+\gamma_k I+\alpha_k \mathcal{G}_k]x \\ & -\sum_k K(h^T\mathcal{G}_k x)h^T[-\beta_k\mathcal{G}_k A-\alpha_k R_k]x \\ & -K\delta\sigma^2\left(1-\frac{K}{\overline{K}}\right). \end{aligned} \tag{10}$$

Setting $\alpha_k=\beta_k\mu_k$ and using relations (6),

$$\begin{aligned}\dot{V} = {} & \tfrac{1}{2}x^T(A^TP+PA)x-\left(\beta_0 h^T b+\frac{\delta}{\overline{K}}\right)(K\sigma)^2 \\ & -K\sigma x^T\Big[Pb-\beta_0 A^T h-\delta h \\ & -\sum_k \gamma_k\left(1-\frac{K}{\overline{K}}+Kd_k\right)R_k^T h\Big] \\ & -K\delta\sigma^2\left(1-\frac{K}{\overline{K}}\right). \end{aligned} \tag{11}$$

## The Stability Criterion

A direct application of the Meyer-Kalman-Yakubovich lemma[2] gives the criterion for asymptotic stability as

$$\begin{aligned}\beta_0 h^T b+\frac{\delta}{\overline{K}}+\mathrm{Re}\Big[\delta+\beta_0 h^T A \\ +\sum_k \gamma_k\left(1-\frac{K}{\overline{K}}+d_k K\right)h^T R_k\Big] \\ \cdot[j\omega I-A]^{-1}b\geq 0 \end{aligned} \tag{12}$$

for all real $\omega$, where $\delta>0$.

Use of property (7) yields the criterion in the form

$$\mathrm{Re}\, Z(j\omega)G(j\omega)\geq 0 \tag{13}$$

for all real $\omega$, where

$$Z(s)=\delta+\beta_0 s+\sum_k \frac{\gamma_k\left(1-\frac{K}{\overline{K}}+d_k K\right)}{\beta_k}\frac{s}{s^2+\mu_k^2}. \tag{14}$$

Since $d_k\geq 0$ and $K<\overline{K}$, one can always choose $\gamma_k$ and $\beta_k$ to get

$$Z(s)=\delta+\beta_0 s+\sum_k \frac{C_k s}{s^2+\mu_k^2} \tag{15}$$

where $\delta>0$ and $\beta_0$, $C_k$ are any non-negative numbers. If only neutral stability is desired, $\delta\geq 0$.

## Interpretation of the Criterion

Brockett and Willems[4] have shown that a necessary and sufficient condition for a transfer function $G(s)$ to be stable for all linear negative feedback gains in $(0, \overline{K})$ is that there should exist a multiplier $Z(s)$ such that

$$Z(s)\left[G(s)+\frac{1}{\overline{K}}\right]$$

is positive real, and

$$Z(s)=\frac{s\prod_i(s^2+\lambda_i^2)}{\prod_k(s^2+\mu_k^2)} \tag{16}$$

where $\lambda_i$ and $\mu_k$ are frequencies at which

$$\mathrm{Arg}\left[G(j\omega)+\frac{1}{\overline{K}}\right]=0$$

and

$$\frac{d\,\mathrm{Arg}\left[G(j\omega)+\frac{1}{\overline{K}}\right]}{d\omega}<0 \text{ at } \omega=\lambda_i$$

$$\frac{d\,\mathrm{Arg}\left[G(j\omega)+\frac{1}{\overline{K}}\right]}{d\omega}>0 \text{ at } \omega=\mu_k. \tag{17}$$

This assumes that the first nonzero value of Arg $G(j\omega)$ is negative.

A slight extension of the result yields the form of multiplier for asymptotic stability as

$$Z(s)=\delta+\frac{s\prod_i(s^2+\lambda_i^2)}{\prod_k(s^2+\mu_k^2)} \tag{18}$$

where $\delta>0$ can be arbitrarily small.

By expanding (18) in partial fractions, $Z(s)$ can be put in the same form as (15).

Thus the criterion (13) developed using the Liapunov function (8) is equivalent to the criterion of Brockett and Willems and is hence necessary and sufficient.

If the phase angle of $G(j\omega)$ starts in the positive direction, one can consider $1/(G(j\omega)+1/\overline{K})$ in the place of $G(j\omega)+1/\overline{K}$ and proceed as before.

The results can be extended to the case where $G(s)$ is the ratio of equal-order polynomials. Using a well-known transformation,[5] the stability of such a system is equivalent to that of a system having a transfer function $G(s)-G(\infty)$ with negative feedback gains in $[0, \overline{K}/(1+\overline{K}G(\infty))]$, and hence the results derived earlier can be applied.

## Conclusion

It has been shown that a necessary and sufficient condition for the asymptotic stability of a linear time-invariant system for all linear negative feedback gains $K$ in $(0, \overline{K})$ is the existence of a Liapunov function of the form

$$V=x^TPx+Kx^TMx$$

where $P$ is positive definite, and

$$\begin{aligned}M = {} & \beta_0 hh^T \\ & +\sum_k \beta_k[R_k^T hh^T R_k+\mathcal{G}_k^T hh^T\mathcal{G}_k]\end{aligned}$$

is positive semidefinite.

Thus the Liapunov function is the sum of a positive-definite quadratic form and a positive-semidefinite quadratic form depending linearly on $K$ as conjectured by Narendra.[1]

M. A. L. Thathachar
M. D. Srinath
Dept. of Elec. Engrg.
Indian Inst. of Sci.
Bangalore 12, India

## *Author's Reply*[6]

Thathachar and Srinath are to be congratulated on deriving a simple Liapunov function for proving the stability of a linear time-invariant feedback system in the entire range $0<K<\infty$ (or $\overline{K}$) of the feedback gain. The proof is based on the fact that a $Z_{LC}(s)$ function always exists so that $G(s)Z_{LC}(s)$ is positive real if the feedback system is stable for all feedback gains in the range $0<K<\infty$. The authors' contribution lies in choosing the terms of the Liapunov function, particularly the matrices $R_K$ and $I_K$ in (8) so that the desired multiplier $Z_{LC}(s)$ can be obtained. Since the existence of the multiplier $Z_{LC}(s)$ is both necessary and sufficient to prove the stability of the feedback system, the existence of the Liapunov function of the form derived is both necessary and sufficient for stability in the range $0<K<\infty$ (or $\overline{K}$).

On the basis of the results obtained, one can proceed to determine, for the time-invariant case, a Liapunov function having the general form

$$V(x)=x^TPx+Kx^TQx \tag{19}$$

where $P$ is a positive-definite matrix and $Q$ a semidefinite matrix which can be expressed as

$$Q=\sum_i \beta_i H_i hh^T H_i^T$$

where $H_i$ is an $(n\times n)$ matrix. The Liapunov function (8) derived in the correspondence can be used for the most restrictive case to obtain an $LC$ function $Z_{LC}(s)$, for which $G(s)Z_{LC}(s)$ is positive real. In most cases, however, where $Z_{RC}(s)$, $Z_{RL}(s)$, or $Z_{RLC}(s)$ multipliers exist, simpler Liapunov functions of the general form (19) can be determined. In such cases, the Liapunov function for the linear time-invariant case can be suitably modified for different nonlinear situations.[2]

The form of the $Q$ matrix is closely related to the form of the multiplier $Z(s)$ that is required to make $G(s)Z(s)$ positive real and consequently to the class of nonlinear

[4] R. W. Brockett and J. L. Willems, "Frequency domain stability criteria—part I," *IEEE Trans. on Automatic Control*, vol. AC-10, pp. 255–271, July 1965.

[5] M. A. L. Thathachar, M. D. Srinath, and G. Krishna, "Stability with nonlinearity in a sector," *IEEE Trans. on Automatic Control (Correspondence)*, vol. AC-11, pp. 311–312, April 1966.

[6] Manuscript received February 15, 1967.

TABLE I

| $Q$ | Multiplier $Z(s)$ $G(s)$ $Z(s)$ P.R. | Nonlinear Gain for which System Is Stable |
|---|---|---|
| 1) $Q = 0$ (Null Matrix) | Constant | Nonlinear and Time-Varying Gains $0 < \frac{f(\sigma, t)}{\sigma} < \infty$ |
| 2) $Q = \alpha hh^T$ | $(1 + \alpha_s)$ | $0 < \frac{f(\sigma)}{\sigma} < \infty$ (Popov) |
| 3) $Q = \alpha hh^T + \sum_i \epsilon_i r_i r_i^T$ | $Z_{RL}$ or $Z_{RC}$ | Monotonic Increasing Function $f(\sigma)$ |
| $r_i^T = h^T(\eta_i I + A)^{-1}$ $-\eta_i$ is a real zero of $G(s)$ | | $0 < \frac{f(\sigma)}{\sigma} < \infty$ |
| 4) $Q$ [in Equation (8)] | $Z_{LC}$ | Constant Gain $K$, $0 < K < \infty$ |

gain functions for which the system is also stable. Examples of this relationship are indicated in Table I.

It is this author's opinion that the same form (19) of the Liapunov function can also be used to derive conditions for the stability of linear time-varying systems by replacing $K$ by $K(t)$ in (19). In such cases, the time derivative $\dot{K}(t)$ has to be constrained in some manner.

K. S. Narendra
Yale University
New Haven, Conn.

## Explicit Stability Criteria for the Damped Mathieu Equation

### Introduction

The purpose of this correspondence is to establish explicit stability criteria for the Mathieu equation with damping term $\delta > 0$:

$$\ddot{x} + \tfrac{1}{2}\delta\dot{x} + (\omega^2 + \epsilon \cos 2t)x = 0. \qquad (1)$$

Since the time-invariant part of (1) is uniformly asymptotically stable, it is thus known that for $\epsilon$ sufficiently small the perturbed equation will also be stable. An application of Liapunov's direct method enables one to obtain a bound on the parameter $\epsilon$ within which bound stability is assured. In particular, it will be shown that under the reasonable assumptions of large $\omega$ and small $\delta$, the condition for stability of (1) becomes a very simple inequality relationship involving only $\epsilon$ and $\delta$, i.e., independent of the frequency $\omega$.

### Application of Liapunov's Direct Method

Equation (1), the damped Mathieu equation with damping term $\delta > 0$, frequency $\omega$, and small parameter $\epsilon$, is equivalent to the system

$$\dot{x}_1 = x_2$$
$$\dot{x}_2 = -(\omega^2 + \epsilon \cos 2t)x_1 - \tfrac{1}{2}\delta x_2.$$

Manuscript received January 3, 1967.

One can then write

$$\dot{\mathbf{x}} = [\boldsymbol{A} + \epsilon \boldsymbol{P}(t)]\mathbf{x} \qquad (2)$$

where

$$\mathbf{x} = (x_1\ x_2)'$$
$$\boldsymbol{A} = \begin{pmatrix} 0 & 1 \\ -\omega^2 & -\tfrac{1}{2}\delta \end{pmatrix}$$
$$\boldsymbol{P}(t) = \begin{pmatrix} 0 & 0 \\ -1 & 0 \end{pmatrix} \cos 2t.$$

The "prime" is used to denote the transpose of a vector or a matrix. The eigenvalues $\lambda_{1,2}$ for the time-invariant part of (2) are easily determined to be

$$\lambda_{1,2} = \frac{-\delta \pm \sqrt{\delta^2 - 16\omega^2}}{4}$$

from which it is seen that $\mathrm{Re}\{\lambda_{1,2}\} < 0$ for all $\delta > 0$, $\omega \neq 0$. Hence, the time-invariant part of (2) is uniformly asymptotically stable. This ensures that for $\epsilon$ sufficiently small, the perturbed system will also be stable. It is now desired to obtain explicit stability criteria involving $\epsilon$, $\delta$, and $\omega$.

Toward that end, choose as a tentative Liapunov function for (2) the quadratic form

$$V(\mathbf{x}, t) = V(\mathbf{x}) = \mathbf{x}'\boldsymbol{B}\mathbf{x}$$

where $\boldsymbol{B}' = \boldsymbol{B} = (b_{ij})$. This choice of $V(\mathbf{x})$ leads to

$$\dot{V}(\mathbf{x}, t) = -\mathbf{x}'[\boldsymbol{C} - \epsilon(\boldsymbol{P}'\boldsymbol{B} + \boldsymbol{B}\boldsymbol{P})]\mathbf{x}$$

where

$$\boldsymbol{A}'\boldsymbol{B} + \boldsymbol{B}\boldsymbol{A} = -\boldsymbol{C} \qquad (3)$$

with the matrix $\boldsymbol{C}$ restricted to be positive definite. Then, noting that $b_{12} = b_{21}$, and choosing $\boldsymbol{C}$ equal to the identity matrix, (3) becomes

$$\begin{pmatrix} -2\omega^2 b_{12} & b_{11} - \tfrac{1}{2}\delta b_{12} - \omega^2 b_{22} \\ b_{11} - \tfrac{1}{2}\delta b_{12} - \omega^2 b_{22} & 2(b_{12} - \tfrac{1}{2}\delta b_{22}) \end{pmatrix} = -\begin{pmatrix} 1 & 0 \\ 0 & 1 \end{pmatrix}.$$

Solving three independent equations for the three independent unknowns $b_{11}$, $b_{12}$, and $b_{22}$, results in

$$b_{11} = \frac{4\omega^4 + 4\omega^2 + \delta^2}{4\delta\omega^2}$$
$$b_{12} = \frac{1}{2\omega^2} \quad (= b_{21}) \qquad (4)$$
$$b_{22} = \frac{\omega^2 + 1}{\delta\omega^2}.$$

The matrix $\boldsymbol{B}$ determined in this manner is the matrix of a positive definite quadratic form.

With $\boldsymbol{B}$ now given by (4), one has

$$\boldsymbol{P}'\boldsymbol{B} + \boldsymbol{B}\boldsymbol{P} = -\begin{pmatrix} 1 & \frac{\omega^2 + 1}{\delta} \\ \frac{\omega^2 + 1}{\delta} & 0 \end{pmatrix} \frac{\cos 2t}{\omega^2}$$

and thus

$$\dot{V}(\mathbf{x}, t) = -\mathbf{x}'\boldsymbol{D}\mathbf{x}$$

where

$$\boldsymbol{D} = \begin{pmatrix} 1 + \frac{\epsilon}{\omega^2}\cos 2t & \epsilon\frac{\omega^2 + 1}{\delta\omega^2}\cos 2t \\ \epsilon\frac{\omega^2 + 1}{\delta\omega^2}\cos 2t & 1 \end{pmatrix}.$$

In order that $V(\mathbf{x})$ be a Liapunov function, those values of $\epsilon$, $\delta$, and $\omega$ are sought such that $\boldsymbol{D}$ is positive semidefinite. A sufficient condition that the real, symmetric, time-varying matrix $\boldsymbol{D}$ be positive semidefinite is that its principal determinants be strictly greater than zero. This condition leads to the following constraints on $\epsilon$, $\delta$, and $\omega$:

$$1 + \frac{\epsilon}{\omega^2}\cos 2t > 0$$
$$\epsilon^2\left(\frac{\omega^2 + 1}{\delta\omega^2}\right)^2 \cos^2 2t - \frac{\epsilon}{\omega^2}\cos 2t - 1 < 0.$$

The above inequalities are satisfied for all $t$ when

$$|\epsilon| < \omega^2 \qquad (5)$$

and

$$\epsilon_- < \epsilon < \epsilon_+ \qquad (6a)$$

where

$$\epsilon_\pm = \pm\frac{1}{2}\left(\frac{\delta\omega}{\omega^2 + 1}\right)^2 \cdot \left\{-1 + \left[4\left(\frac{\omega^2 + 1}{\delta}\right)^2 + 1\right]^{1/2}\right\}. \qquad (6b)$$

Whenever (5) and (6a) are satisfied, then $V(\mathbf{x})$ is positive definite with negative semidefinite time derivative. Hence, $V(\mathbf{x})$ qualifies as a Liapunov function and the system (2) is stable. If all the principal determinants of $\boldsymbol{D}$ were greater than some number $\gamma$, i.e.,

$$1 + \frac{\epsilon}{\omega^2}\cos 2t > \gamma$$
$$\epsilon^2\left(\frac{\omega^2 + 1}{\delta\omega^2}\right)^2 \cos^2 2t - \frac{\epsilon}{\omega^2}\cos 2t - 1 < -\gamma$$

where $\gamma$ is a positive constant independent of $\mathbf{x}$ and $t$, then $\dot{V}(\mathbf{x}, t)$ would be negative definite, and the system (2) would therefore be asymptotically stable.

### Simplification of the Stability Criteria

Consider the case when $\omega$ is large and $\delta$ relatively small, i.e.,

$$\frac{\delta}{\omega^2 + 1} \ll 1 \qquad (7)$$

$$\frac{\omega^2}{\omega^2 + 1} \approx 1. \qquad (8)$$