Development of a DSP based educational kit for power electronics and drives

(Category:- DSP based teaching curriculum development)

Amit Kumar Jain, Jayant Thakur, Rajib Datta, V.T.Ranganathan
(amitkrjain@yahoo.com)(Jayant@ee.iisc.ernet.in)(rajib.datta@de.abb.com)(vtran@ee.iisc.ernet.in)
Power Electronics Group, Department of Electrical Engineering,
Indian Institute of Science, Bangalore 560012 India
Ph.no:- 91-080-3092932 Fax.no:- 91-080-360-0444

Abstract

The educational kit was developed for digital control applications in power electronics and drives. The need and purpose of this kit is to train engineers with current technology of digital control in power electronics. The DSP is the natural choice as it is able to perform high speed calculations required in power electronics. The educational kit consists of a DSP platform using TI DSP320C50 starter kit, an inverter and an induction machine-dc machine set. A set of experiments have been prepared so that DSP programming can be learned easily in a smooth fashion. Here the application presented is open loop V/F control of three phase induction motor using sine pulse width modulation technique.

Finally it is concluded with the hope that engineers and students will take advantage of the available educational kit for better understandings of DSP based digital control applied to power electronics.

1.Introduction

This paper describes an educational kit that has been developed to help students and engineers to learn to apply DSP's in the control of power electronics systems. The set up consists of a DSP platform, an IGBT inverter and an induction machine coupled to a dc machine. The learning material is organized in the form of a sequence of eleven experiments. By following this sequences, the student should be able to control the induction motor to realize an open loop V/F drive. It is envisaged that this setup can form the basis of a laboratory course at the final year undergraduate stage as well as in the post graduate course in power electronics. It can even be used for training engineers in industry.

2(a) Connection diagram of the educational kit.

The connection diagram of the educational kit can be seen in fig.1.

As mentioned previously it consists of
(a) A DSP platform.
(b) An inverter and
(c) An Induction machine-dc machine set coupled.

The DSP Platform is designed in such a way that it can be directly interfaced to the inverter. It is a platform built around the TI DSP 320C50 starter kit. An ADC and a DAC are used to interface with the external world. A dgital port is provided to generate pulses for the inverter and LED indication. Timers are provided for interrupts generation to the processor.

The Inverter used here is a three phase IPM (intelligent power module) based 1.6 KVA inverter. This inverter has a inbuilt micro controller with the facility that control can be shifted to the DSP with a toggle switch. Another important feature of the inverter is that its DC bus can be charged from a single phase 230V supply.

The machine set consist of a 0.55 KW induction motor coupled to a 0.75kW DC machine. An incremental encoder can be mounted as a option on the shaft for position and speed information which are required for more sophisticated controls.

2(b)Theory of V/F control in brief.

(Reference:- Power electronics, Ned Mohan)
V/F is one of the well known control techniques in induction motor control. In Induction machine, the torque is proportional to square of flux multiplied with the slip frequency. Flux is proportional to the ratio of voltage to frequency. For controlling the speed of induction motor, voltage applied to it has to be changed. If voltage control is done alone then the flux applied is weakened and correspondingly torque will be reduced at speed lower than the rated speed. But if the applied voltage is changed in such a way that voltage to frequency ratio is maintained constant, the flux will remain constant and so the corresponding torque. Thus the basic advantage of this control technique is that torque is maintained constant at all speeds from the zero the rated speed.

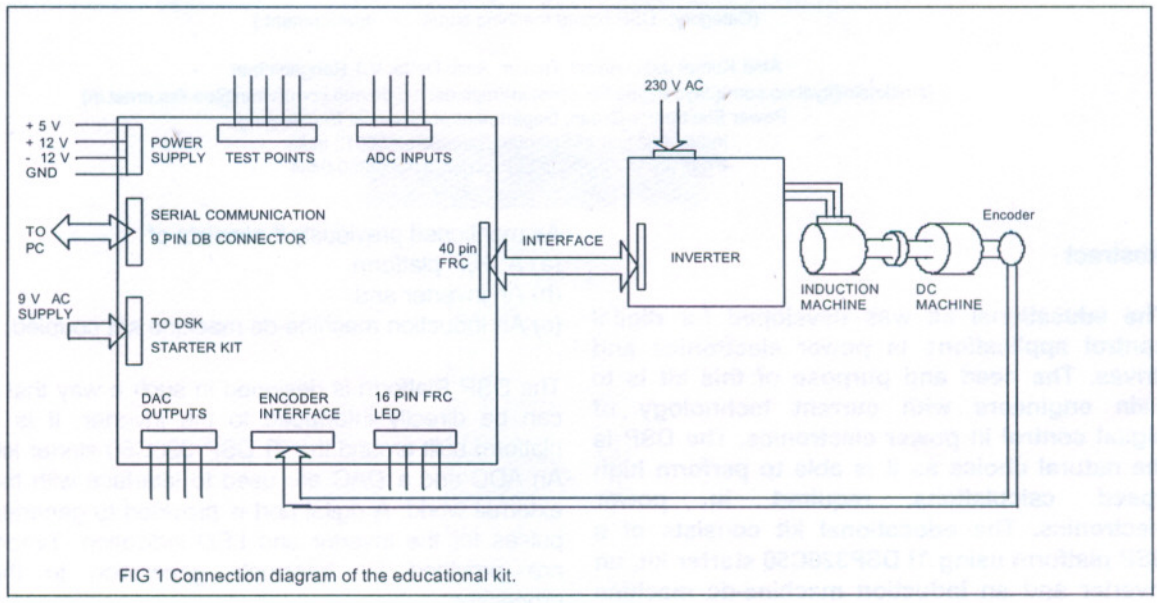

FIG 1 Connection diagram of the educational kit.

As voltage can not be increased more than the rated voltage, the v/f ratio can not be maintained constant above the rated speed, and therefore this control is not suitable for speeds above the rated speed.

2(c)Theory of sine pulse width modulation technique in brief. (Reference:- Power electronics, Ned Mohan)

Here sine pulse width modulation technique is used for switching the inverter. In this technique a modulated sine wave is compared with a high frequency triangle carrier wave and pulses are generated for switching the inverter with the logic that whenever sine wave is greater than triangular wave pulses are high and they are low if it is vice versa.

3. Brief explanation of the set of experiments.

In total this educational kit has a set of eleven experiments. In this section a brief explanation of the experiments is presented. It starts from the introduction chapter which gives some preliminary introduction to programming. With every experiments some additional notes are provided which are required for that particular experiment and some procedure are defined to carry out the experiment.

Introduction chapter.

In this chapter some basic preliminary introduction is provided required to start programming on DSP. The information required at starting are organization of program and data memory, initialization of the processor, normalization followed for a fixed point processor etc. In addition, details of the board are also provided.

Experiment No.1.

This experiment helps to learn digital to analog conversion logic with the use of the DAC chip on the board. It gives all the data relevant to the experiment and set of procedures to be followed. This experiment helps the student to learn how to output a digital word as analog voltage through the DAC and to test the transfer characteristics of DAC.

Experiment No.2.

This experiment aims at learning the generation of time varying signal through the DAC .i.e. how ramp of variable frequencies can be generated through the DAC.

Experiment No.3.

This experiment aims at using ADC and DAC together. This helps to learn how to read analog signals through ADC and output the same via DAC. ADC chip details have been given, with set of procedure to be followed for ADC programming.

Experiment No.4.

This experiment aims at learning sampling and to use the same while working with the ADC and DAC. It explains how to generate timer interrupts. It also

gives certain procedure to be followed to be able to generate sampling of different frequencies and view the effects at high switching frequencies.

Experiment No.5.

This experiment helps to learn generation of sine table and how to output the sine wave using the table. Sine table generation is done using C programming. It helps to learn how to generate different frequency sine wave using sine table while keeping the sampling frequency as constant.

Experiment No.6.

This experiment aims at learning the generation of three phase sine wave waves at different frequencies while keeping the voltage to frequency ratio as constant. This requires calculation of angle as a function of sampling time, table length and frequency. Three phase sine generation requires that all phases are shifted by 120 degrees. Sine magnitude has also to be varied accordingly with frequency variation to keep voltage to frequency ratio constant

Experiment No.7

This experiment aims at learning the operation of timers in different modes. The commonly used modes are the square wave generation and software triggered mode.

Experiment No.8.

This experiment aims at learning how to generate adjustable width pulses using timers and digital ports while keeping the same sampling time. This experiment shows how duty ratio of the pulses can be adjusted with the alteration of only one parameter.

Experiment No.9.

This program helps to learn how to implement the sine triangle pulse width modulation technique in the DSP processor. As we know in this technique a sine wave is compared with a triangular wave and switching pulses for the inverter are generated where they are kept high if sine magnitude is greater than magnitude of triangular wave and they are kept low if it is vice versa. Here in this experiment a logic is developed which will implement the above mentioned technique.

Experiment No.10

In this experiment students learn how to run the induction motor from the inbuilt microcontroller. Also motor currents can be outputted through the DAC which comes as a feedback through the interfacing from the inverter. The interfacing details are provided.

Experiment No.11

This experiment is the last experiment and it aims to run the motor from the DSP controller. V/F based program has to be written such that machine speed is ramped up from zero speed to rated speed. As here V/f ratio is kept constant, currents will have a constant rated magnitude at all speeds, which shows that torque is maintained constant at all speeds.

4. Conclusion.

With the help of this educational kit, it is hoped that laboratory instructions on digital control for power electronics systems will be strengthened. Since the controller is based on a starter kit, so the emulator is not required, thus making the system very much affordable. Although the present set of experiments stops at V/F control, the system can be used to learn more advanced techniques such as vector control and direct torque control. These are generally taught at post graduation level.

5.Appendix.

(1) *Induction machine*
0.55 kW, 220 V, 1370 rpm, 2.65 A, 3 phase.

(2) *DC machine*
Armature circuit
0.75 kW, 1500rpm, 180 V, 5.5 A
Field circuit
220 V, 0.51 A, Shunt

(3) *Inverter*
INVAC, AC drive. model no-IRA CO IM,
Rating-1.6 KVA
Input- 1 phase, 230 V, 50 hz.
Output- 3 phase, 0-220 V, 0-200 hz.

Manufactures address:-
(1) (Inverter and machine set)
Integrated electric company (Pvt) ltd,
Peenya industrial area,
Bangalore
(2) (DSP platform)
Advanced electronic systems (ALS),
106, 8th main, Near 18th cross,
Malleswaram west, Bangalore-560055

6.References

(1) V.T.Ranganathan and V.Ramanarayanan 'short term course on power electronics and drives' PEG, EE deptt, Indian institute of science.

(2) DSP 320C50 starter kit manual and user's manual.

(3) IEC inverter manual.

(4) Power electronics, Ned mohan.