OPTOELECTRONICS AND ADVANCED MATERIALS – RAPID COMMUNICATIONS Vol. 2, No. 10, October 2008, p. 599 - 602

One-wavelength fiber Bragg grating array interrogation by reflectivity division multiplexing

K. V. MADHAV, S. YAMDAGNI, T. SRINIVAS[a*], S. ASOKAN
Department of Instrumentation, Indian Institute of Science, Bangalore 560012, INDIA
[a]*Department of Electrical Communication Engineering, Indian Institute of Science, Bangalore 560012, INDIA*

We present a novel fiber Bragg grating array interrogation system wherein all the sensors have the same Bragg wavelength but different reflectivities. The sensor grating signals are tracked using a multiple–threshold level–crossing network consisting of reference gratings and are encoded as a series of signal pulses whose amplitudes are proportional to the reflectivity of the corresponding sensor. Demodulation is achieved by assembling the pulses by virtue of their heights and temporal order to reconstruct the signals of each sensor. The proposed reflectivity division multiplexing (RDM) method is a completely passive system that gives a direct readout of the perturbation, ideal for high-speed high-frequency real-time applications.

(Received August 1, 2008; accepted August 14, 2008)

Keywords: Fiber Bragg grating array, Reflectivity division multiplexing, Sensor

1. Introduction

The self-referencing capability of a fiber Bragg grating sensor make it more advantageous over other fiber optic sensors when used in an array where, several of them can be serially inscribed in a photosensitive optical fiber, spatially and spectrally distributed as required. Consequently, the spectral dependence of the FBG on the measurand necessitates that in an array each of the FBG must also be spectrally different. Given the finite width of the source, the number of gratings that can be addressed simultaneously is limited. However, various interrogation techniques have been proposed to increase the sensor number, such as, Wavelength Division Multiple Access (WDMA) [1], Frequency Modulated Continuous Wave (FMCW) technique [2], Code Division Multiple Access (CDMA) [3], wavelength-scanned fiber laser [4], Spatial Division Multiplexing (SDM) [5], titled Fiber Bragg Grating [6], wavelength shift time-stamping (WSTS) [7] and matched filter interrogation [8]. The FMCW and TDM methods circumvent the requirement that in an array each sensor FBG must be allotted a different Bragg wavelength, but both are active interrogations. The tilted fiber grating method is a passive method, but requires that each sensor be spectrally distinguished.

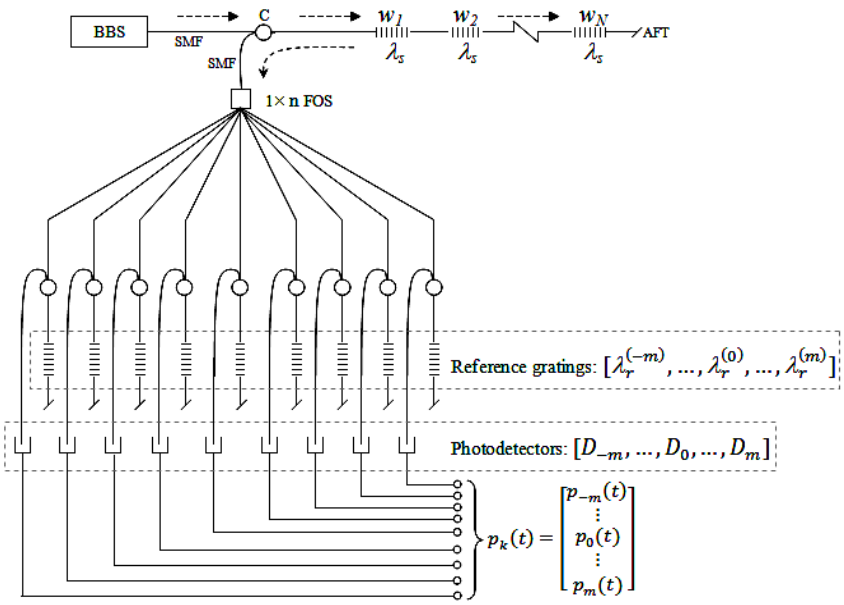

Fig. 1. RDM topology incorporating the WSTS technique to interrogate N identical FBG sensors. BBS: Broadband Source. C: Circulator. SMF: Single mode fiber. AFT: Angled fiber termination. FOS: Fiber optic splitter.

Majority of the interrogation techniques are active interrogations, where either the source is modulated and/or the reflected spectrum is scanned to derive the data. A system that has both the advantages of single wavelength grating array and passive interrogation is due. The present RDM technique addresses both these requirements.

Previously reported interrogation systems track the sensor grating Bragg wavelength. The shift $\Delta\lambda_B$, is in actuality derived by measuring the perturbed Bragg wavelength λ'_B and comparing it with the unperturbed Bragg wavelength λ_B to calculate $\Delta\lambda_B = \lambda \pm \lambda'_B$. The strain ε (or temperature T) is then found by dividing $\Delta\lambda_B$ with the strain (or temperature) sensitivity of the grating, which is typically 1.2pm/$\mu\varepsilon$ (or 10pm/^{o}C). Both λ_B and λ'_B are tracked in the optical domain, although the actual interest is in $\Delta\lambda(t)$ or more precisely $\varepsilon(t)$ (or $T(t)$), the time dependent data. The delay in locating λ'_B optically and then calculating $\Delta\lambda_B$ limits the speed of response of the interrogation system in applications where, the delay is in time scales comparable to that of $\varepsilon(t)$. The RDM technique provides a 'direct readout' of $\varepsilon(t)$ or $T(t)$ for N sensors in real-time.

2. Theory

In a typical FBG array each of the sensors are assigned different Bragg wavelengths $\left\{\lambda_B^1, \lambda_B^2, \lambda_B^3, \ldots, \lambda_B^N\right\}$ and non-overlapping operational windows. This arrangement leads to the well known problem where the number of sensors N is limited by the bandwidth of the broadband source (BBS). In the RDM scheme, the reflectivity of each grating is different $\{w_1, w_2, w_3, \ldots, w_N\}$, but the Bragg wavelength (λ_s) is same. The layout of the interrogation technique is shown in Fig.1. Using a circulator, light from BBS is launched into the fiber Bragg grating array (FBGA) and the reflected light is divided equally into n arms through a $1\times n$ fiber optic splitter (FOS). Each output arm of FOS has a single reference grating $\lambda_r^{(k)}$, whose wavelength is offset from the sensor grating wavelength λ_s by the relation,

$$\lambda_r^{(k)} = \lambda_s + kq \tag{1}$$

where, $m < k < m$, $k \in Z$, $2m+1 = n$ is the number of reference arms, and q is the separation between the reference wavelengths. In order to prevent simultaneous spectral overlap of the sensor spectrum and the two adjacent reference spectrums, we define $q > \Delta\lambda_s$, the full width at half maximum (FWHM) of the sensor gratings.

All the sensor gratings will have the same resonant wavelength λ_s only in the beginning. If a sensor grating is perturbed by an amount $\Delta\lambda_k = k\delta$, then from eq.(1) we see that the spectrum reflected from the sensor, centered at $\lambda_k = \lambda_s + \Delta\lambda_k$ will be again reflected back by the corresponding reference grating $\lambda_r^{(k)}$ and directed into the photodetector D_k through the circulator. For example, if the third sensor with reflectivity w_3 is strained to λ_2 (or λ_{-2}), the photodetector D_2 (or D_{-2}) registers a high. In the topology proposed here, we assume that all the gratings are apodized and for analytical simplicity the reflectivity is modeled as a Gaussian function [9],

$$G_{rk}(\lambda) = R_0 \exp\left[-4(\ln 2)\left(\frac{\lambda - \lambda_r^{(k)}}{\Delta\lambda_r}\right)^2\right] \tag{2a}$$

$$G_{sj}(\lambda) = w_j \exp\left[-4(\ln 2)\left(\frac{\lambda - \lambda_s}{\Delta\lambda_s}\right)^2\right] \tag{2b}$$

where, $j \in [1,N] \cap Z$, R_0 and w_j, are the reference and sensor grating reflectivities, respectively and $\Delta\lambda_r$ is the reference grating FWHM.

For the complete transfer of power filtered by the sensor grating to the photodetector, it is required that $\Delta\lambda_r \geq \Delta\lambda_s$ and R_0 is as high as possible. The signal received by the photodetector D_k is given by:

$$P_k = \int_{-\infty}^{\infty} S(\lambda)\left[\sum_{j=1}^{N} G_{sj}(\lambda)\right] G_{rk}(\lambda)\, d\lambda \tag{3a}$$

$$= \sum_{j=1}^{N} w_j \left\{ S(\lambda) R_0 \frac{\Delta\lambda_r \Delta\lambda_s}{\left(\Delta\lambda_r^2 + \Delta\lambda_s^2\right)^{1/2}} \sqrt{\frac{\pi}{4\ln 2}} \times \exp\left[-4(\ln 2)\frac{\left(\lambda_r^{(k)} - \lambda_s\right)^2}{\Delta\lambda_r^2 + \Delta\lambda_s^2}\right]\right\} \tag{3b}$$

where, $S(\lambda)$ is the emission spectrum of the source. Introducing eq.(1) into eq.(3b), and setting $\Delta\lambda_r = \Delta\lambda_s = \Delta\lambda$ for simplicity, we get,

$$P_k = \sum_{j=1}^{N} w_j \sigma$$

where, we have defined,

$$\sigma = S(\lambda) R_0 \Delta\lambda \sqrt{\frac{\pi}{8\ln 2}} \exp\left[-2(\ln 2)\left(\frac{\Delta\lambda_k}{\Delta\lambda}\right)^2\right] \tag{4}$$

When the perturbation on a sensor grating is $\Delta\lambda_k$ (corresponding to $\varepsilon_r^{(k)}$ strain, for example), the output of the photodetector D_k will show the corresponding w_j weighted time-stamp at t_{jk}, shaped as σ.

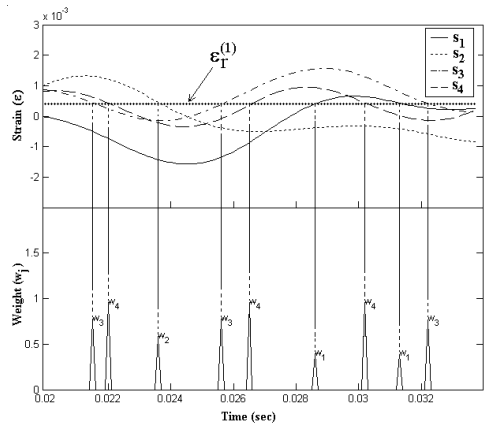

Fig. 2. w_j *weighted time-stamps at the output of* D_K *for N = 4 and k = 1.*

We represent the output signal from the photodetectors as a train of weighted delta functions δ(*t*) at t_{jk},

$$p_k(t) = \sum_{j=1}^{N} w_j \delta(t - t_{jk})$$

The amplitude of the pulse identifies the sensor and by collecting the w_j weighted time-stamps from the photodetector output $p_k(t)$, the original strain signal $s_j(t)$ is reconstructed as,

$$\hat{s}_j(t) = \sum_{k=-m}^{m} \varepsilon_r^{(k)} \delta(t - t_{jk})$$

Demodulation of $p_k(t)$ is done by using a matrix of *N*×*n* double-ended limit detector (DELD) circuits (LM101A National Semiconductors) as shown in Fig.3. Each DELD circuit (C_N^n) generates an output pulse when the photodetector output voltage lies inside a window ($V_{LT} \le V_{IN} \le V_{UT}$). The limits V_{LT} and V_{UT} depend on the optical noise and the fluctuations in the reflectivity of the sensor and reference gratings.

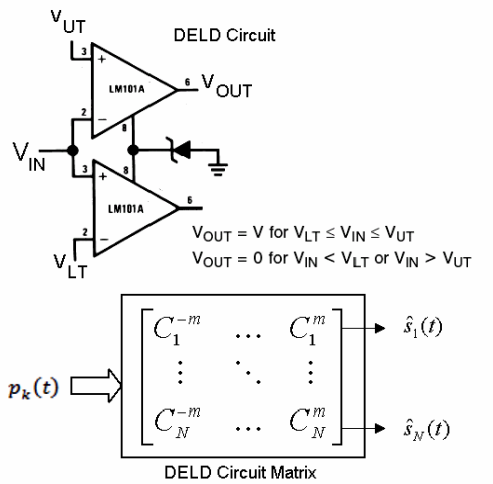

Fig. 3. Schematic of the RDM demodulation system.

3. Results and discussion

The time-stamps at the output of photodetector D_1 are shown in Fig.2 for *m* = 1, *N* = 4, and *q* = 0.5nm. Crossing the threshold *k* = 1 by a sensor with reflectivity w_1 results in a pulse at t_{11}. Similarly, crossing threshold *k* = 5 by a sensor with reflectivity w_2 will result in a pulse at t_{25}. The amplitude of the pulses will be proportional to the reflectivity of the sensors. The output of photodetector D_1 is thus a collection of weighted time–stamps created by *N* sensors, as given by eq.(6). $\hat{s}_1(t)$ is reconstructed by using the design values $\{\varepsilon_r^{(-4)}, \ldots, \varepsilon_r^{(0)}, \ldots, \varepsilon_r^{(4)}\}$ after collecting all the w_1 weighted time–stamps t_{1k} from $p_k(t)$ outputs using circuits $\{C_1^{-m}, \ldots, C_1^{m}\}$ and assembling them. A smooth reconstruction of the strain signal is achieved by spline fitting. The RDM technique is evaluated for *N* = 4, *m* = 4, *q* = 0.5nm, λ_s=1560nm, w_1=0.95, w_2=0.75, w_3=0.55 and w_4=0.40. For the choice of *q* and *m*, time stamps are created when $s_j(t)$ crosses ±409.836με, ±819.672με, ±1229.508με, ±1639.344με and the zero strain level $\varepsilon_r^{(0)}$ (time–stamped by $\lambda_r^{(0)}$), as shown in Fig.2. Fig.4 shows the original signal $s_j(t)$ and the reconstructed signal $\hat{s}_j(t)$ for 100Hz bandlimited strain signal.

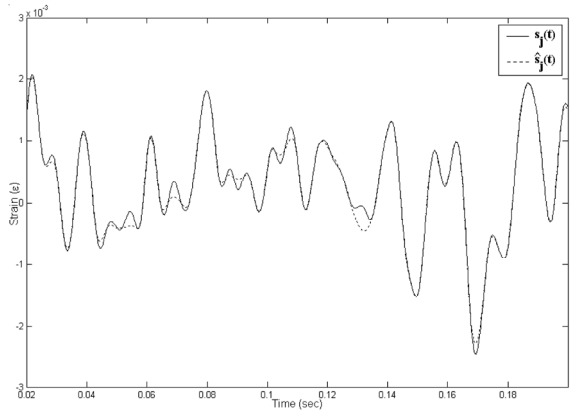

Fig. 4. A section of $s_j(t)$ *and* $\hat{s}_j(t)$ *for a 100Hz bandlimited strain signal.*

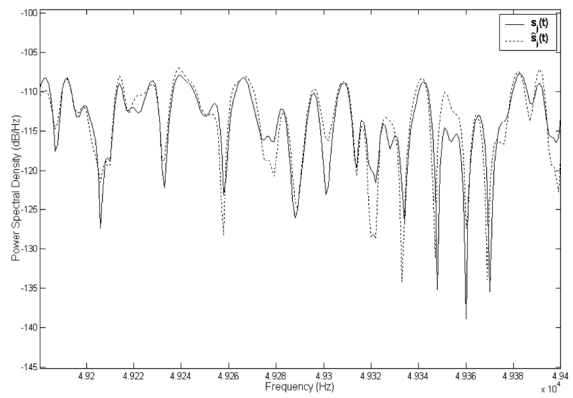

Fig. 5. Power spectral densities of $s_j(t)$ *and* $\hat{s}_j(t)$ *for a 50kHz bandlimited strain signal.*

The power spectral density (PSD) of $s_j(t)$ and $\hat{s}_j(t)$ of a 50kHz bandlimited signal, as shown in Fig.5, suggests a good agreement between the original signal and the reconstructed signal. As the number of thresholds (m) increases, $\hat{s}_j(t)$ will be a more accurate reconstruction of $s_j(t)$, Also, if any strain event $\varepsilon(t)$ is such that $\Delta\lambda_k < q$, i.e it falls in between two levels, then that event is approximated by the spline fit. In the RDM technique there is a possibility that two or more strain signals can cross the same threshold level at the same time t_{jk}. In such cases, those time–stamps will have a weight $\hat{w} \neq w_j$ and are not used to reconstruct $\hat{s}_j(t)$.

4. Conclusions

A novel method of interrogating an FBG array called the reflectivity division multiplexing (RDM) has been proposed and its performance is numerically evaluated. The system is capable of addressing an array where the sensor FBGs have the same Bragg wavelength. The technique is based on collecting the time-stamps from the output of the photodetectors and assembling them by virtue of their weight to reconstruct the strain signal from each of the sensors. The samples are time–stamped at the instances when there is a match between the sensor FBG and the reference FBG. Very good agreement between the PSDs was demonstrated. The proposed RDM technique is a completely passive array sensor interrogation system that provides a direct readout of the strain signals. Also, the RDM technique is a self-sampling system i.e, the system does not employ active scanning techniques and is only dependent on the signal levels; hence, the speed of acquisition is as high as the strain signal itself.

Acknowledgements

The financial support from Aeronautical Development Agency, under DISMAS program is gratefully acknowledged.

References

[1] T. A. Berkoff et al, “Hybrid time and wavelength division multiplexed fiber Bragg grating sensor array," Proc. SPIE **2444**, 288 (1995).

[2] P. K. C. Chan, W. Jin, J. M. Gong, M. S. Demokan, “Multiplexing of fiber Bragg Grating Sensors Using an FMCW Technique," IEEE Photon. Technol. Lett. **11** (11), 1470 (1999).

[3] K. P. Koo. A. B. Tveten and S. T. Vohra,“Dense wavelength division multiplexing of fibre Bragg grating sensors using CDMA," Electron. Lett., **35**(2), 165 (1999).

[4] Zhongxie Jin, Minho Song, “Fiber Grating Sensor Array Interrogation With Time-Delayed Sampling of a Wavelength-Scanned Fiber Laser," IEEE Photon. Technol. Lett., **16** (8), 1924 (2004).

[5] S. Chen, Y. Hu, L. Zhang, I. Bennion,“Digital spatial and wavelength domain multiplexing of fiber Bragg grating based sensors," Proc. 12th OFS Conf., 448 (1997).

[6] C. Jáuregui, J. M. López-Higuera, “Interrogation of fibre Bragg gratings with a tilted fibre Bragg grating,", Meas. Sci. Technol., **15**, 1596 (2004).

[7] K. V. Madhav, S. Asokan , “Spectrum estimation by wavelength shift time-stamping in a fiber Bragg grating sensor," IEEE Photon. Technol. Lett., **16**(5), 1355 (2004).

[8] M. A. Davis, A. D. Kersey, “Matched-filter interrogation technique for fibre Bragg grating arrays", Electron. Lett. **37** (70), 822 (1995).

[9] A. B. Riberio, L. A. Ferreira, J. L. Santos, D. A. Jackson, “Analysis of the reflective-matched fiber Bragg grating sensing interrogation scheme", Appl. Opt. **36**, 934 (1997).

*Corresponding author: srinu@ece.iisc.ernet.in